ICC-ES Evaluation Report

ESR-3445

Reissued October 2024

Revised July 2026

This report remains under an active continuous compliance program through the end of October 2026.

This report also contains:

- **City of LA Supplement**
- **CA Supplement**
- **FL Supplement w/ HVHZ**

ICC-ES Evaluation Reports are not to be construed as representing aesthetics or any other attributes not specifically addressed, nor are they to be construed as an endorsement of the subject of the report or a recommendation for its use. There is no warranty by ICC Evaluation Service, LLC, express or implied, as to any finding or other matter in this report, or as to any product covered by the report.

Copyright © 2026 ICC Evaluation Service, LLC. All rights reserved.

DIVISION: 06 00 00—WOOD, PLASTICS AND COMPOSITES Section: 06 05 23—Wood, Plastic, and Composite Fastenings	REPORT HOLDER: MITEK® INC.	EVALUATION SUBJECT: MITEK® FACE MOUNT HANGERS FOR WOOD FRAMED CONSTRUCTION	

1.0 EVALUATION SCOPE

Compliance with the following codes:

- 2024, 2021, 2018, 2015 and 2012 *International Building Code®* (IBC)
- 2024, 2021, 2018, 2015 and 2012 *International Residential Code®* (IRC)

Property evaluated:

Structural

2.0 USES

The MiTek Face Mount Hangers for Wood Framed Construction described in this report (see Table 19 for complete listing) are used for connecting wood framing members in accordance with Section 2304.10.4 of the 2024 and 2021 IBC, Section 2304.10.3 of the 2018 and 2015 IBC and Section 2304.9.3 of the 2012 IBC). The connectors may also be used in structures regulated under the IRC when an engineered design is submitted to, and approved by, the code official, in accordance with Section R301.1.3 of the IRC.

3.0 DESCRIPTION

3.1 CLPBF Butterfly Hanger:

The CLPBF Butterfly Hanger is a face-mount hanger with triangular header flanges having prepunched nail holes for joist-to-header or truss-to-truss connections. The CLPBF Butterfly Hanger is cold-formed from No. 18 gage steel and is prepunched for 10d common nails into the header and 10d-by-1$^1/_2$-inch nails into the joist. See Table 1 and Figure 1 for product dimensions, fastener schedule, allowable loads, and a typical installation detail.

3.2 HD Face Mount Hanger:

The HD Face Mount Hanger is designed to support headers, joists and trusses. The HD Face Mount Hanger is cold-formed from No. 14 gage steel; and is prepunched for 16d common nails into the supporting member, and either 16d common, 10d common or 10d-by-1$^1/_2$-inch nails into the supported member. See Table 2 and Figure 2 for product dimensions, fastener schedule, allowable loads, and typical installation details. The HD, THD, THF and THFI offer increased allowable download and/or uplift values by installing additional nails into the diamond holes. Minimum ('min') load values require the installation of the specified nails into all round holes of the hanger to support the corresponding allowable loads. Maximum ('max') load values require the installation of the specified nails into all round and all diamond holes of the hanger to support the increased loads. Interpolation is not allowed between the min-max allowable load values and nail count.

3.3 HUS Slant Nail Joist Hanger:

The HUS Slant Nail Joist Hanger is designed to provide double shear nailing for joist/truss-to-beam connections. The HUS Slant Nail Joist Hanger is cold-formed from No. 14 gage or No. 16 gage steel and is prepunched for 16d common nails into both the joist and the header. See Table 3 and Figure 3 for product dimensions, fastener schedule, allowable loads, and typical installation details.

3.4 JL Standard Joist Hangers:

The JL Standard Joist Hangers are designed as face mount hangers for connecting nominal dimension lumber to headers, beams or girders. The JL hangers are cold-formed from No. 20 gage steel. The hangers are prepunched for 16d common or 10d common nails into the header, and 10d-by-$1^1/_2$-inch nails into the joist. See Table 4 and Figure 4 for product dimensions, fastener schedule, allowable loads, and a typical installation detail.

3.5 JN and JNE Power Nail Hangers:

JN and JNE Joist Hangers are designed to support one- and two-ply nominally 2-by-6 and 2-by-8 dimension lumber joists. The JN joist hangers are cold-formed from No.18 gage steel and have a seat depth of $1^5/_8$ inches (41 mm). The JNE joist hangers are cold-formed from No. 20 gage steel and have a seat depth of 2 inches (51 mm). JN and JNE joist hangers are not prepunched for nails. See Table 5 and Figure 5 for product dimensions, required fastener schedule, allowable loads, and a typical installation detail.

3.6 JUS Slant Nail Joist Hanger:

The JUS Slant Nail Joist Hanger is designed for face-mount applications to provide double shear nailing for joist/truss-to-beam connections. The JUS Slant Nail Joist Hanger is cold-formed from No. 18 gage steel and is prepunched for either 10d common or 16d common nails into both the joist and the header. See Table 6 and Figure 6 for product dimensions, fastener schedule, allowable loads, and a typical installation detail.

3.7 SUH Joist Hanger:

The SUH Joist Hanger is designed as a face-mount hanger to support nominal dimension lumber joists. The SUH Joist Hanger is cold-formed from No. 16 gage steel. The SUH Joist Hanger has prongs in the header flanges to temporarily position the hanger on the header. The hanger is prepunched for 10d common or 16d common nails into the header and 10d-by-$1^1/_2$, 10d common, or 16d common nails into the joist. See Table 7 and Figure 7 for product dimensions, fastener schedule, allowable loads, and a typical installation detail.

3.8 THD Face Mount Hanger:

The THD Face Mount Hanger is designed to support metal-plate-connected wood trusses and can also support LVL, LSL and PSL members. The THD Face Mount Hanger is cold-formed from either No. 12 gage, No. 14 gage, or No. 16 gage steel; and is prepunched for 16d common nails into the header, and either 10d common or 10d-by-$1^1/_2$-inch nails into the joist. See Table 8 and Figure 8 for product dimensions, required fastener schedule, allowable loads, and a typical installation detail.

3.9 THDH Face Mount Hanger:

The THDH Face Mount Hanger is designed as a hanger for metal-plate-connected wood trusses and can also support LVL, LSL and PSL members. The THDH Face Mount Hanger is cold-formed from No. 12 gage steel and is prepunched for 16d common nails. See Table 9 and Figure 9 for product dimensions, fastener schedule, allowable loads, and a typical installation detail.

3.10 THF Face Mount Hanger:

The THF Face Mount Hanger is designed to provide lateral top chord support for I-joist-to-header applications. The supporting header may be wood I-joists, LVL, LSL, PSL, or solid sawn lumber. The THF Face Mount Hanger is cold-formed from either No. 18 gage, No. 16 gage, or No. 12 gage steel; and is prepunched for 10d common nails into the header, and either 10d common or 10d-by-$1^1/_2$-inch nails into the joist. See Table 10 and Figure 10 for product dimensions, fastener schedule, allowable loads, and a typical installation detail.

3.11 THFI Face Mount Hanger:

The THFI Face Mount Hanger is designed to provide lateral top chord support for I-joist-to-header applications with the added benefit of having six locking prongs in the hanger seat. The supporting header may be wood I-joists, LVL, LSL, PSL, or solid sawn lumber. The locking prongs provide a consistent uplift capacity for I-joists of all bottom flange thicknesses without the need of hanger-to-joist nails. The THFI also has a patented self-supporting top tab that securely grips to the header and holds the hanger in place without needing manual assistance while fasteners are installed. The THFI Face Mount Hanger is cold formed from No. 18 gage steel and is prepunched for 10d common nails into the header. See Table 11 and Figure 11 for product dimensions, fastener schedule, allowable loads and a typical installation detail.

3.12 LGU/MGU/HGU Girder Hanger:

The LGU/MGU/HGU Girder Hangers are designed as face mount hangers for attaching glulam beams to glulam headers. Header fasteners are located high on the side flanges to allow a deeper supported member to be attached top flush to a shallower supporting member. The LGU/MGU/HGU Girder Hangers are cold formed from either No. 10 gage or No. 7 gage steel and are prepunched for $^1/_4$-inch-diameter MiTek WS Series WS3 (3-inch-length) wood screws. The MiTek WS Series wood screws are proprietary screws described in ESR-2761 and are shipped with the hangers. The LGU/MGU/HGU Girder Hangers can also be used to attach LVL, LSL and PSL beams and headers together. See Table 12 and Figure 12 for product dimensions, fastener schedule, allowable loads and a typical installation detail.

3.13 THDHQ Girder Truss Hanger:

The THDHQ Girder Truss Hangers are designed as face mount hangers for attaching multi-ply metal plated wooded girder trusses together. The THDHQ hangers are cold formed from No. 12 gage steel and are prepunched for $^1/_4$-inch-diameter MiTek WS Series WS3 (3-inch-length), WS45 ($4^1/_2$-inch-length) or WS6 (6-inch-length) wood screws. The MiTek WS Series wood screws are proprietary screws described in ESR-2761 and are shipped with the THDHQ hangers. The THDHQ hangers can also be used to connect LVL, LSL and PSL beams and headers together. See Table 13 and Figure 13 for product dimensions, fastener schedule, allowable loads and a typical installation detail.

3.14 IHF Face Mount Hanger:

The IHF Face Mount Hanger is designed to resist the gravity and uplift loads from wood I-joists. Sized specifically for wood I-joists, the sides of the IHF Face Mount Hanger provide lateral support to the I-joist top flange. The IHF Face Mount hanger is intended to support wood I-joists with flanges manufactured from structural composite lumber (SCL). Design values for the IHF Face Mount Hanger and I-joist flange property requirements are provided in Table 14. The supporting header may be wood I-joist, LVL, LSL, PSL, or solid sawn lumber. The IHF Face Mount Hanger is cold-formed from No. 16 gage steel, and is prepunched for either 10d common or 16d common nails installed into the header and 10d-by-$1^1/_2$-inch nails installed into the joist flanges. Diamond holes in the hanger flanges for hanger-to-header nailing provide for customizable (MIN/MAX) fastening to match the allowable download capacity needed as indicated in Table 14. The IHF Face Mount Hanger dimensions and typical installations are shown in Figure 14.

3.15 IHFL Face Mount Hanger:

The IHFL Face Mount Hanger is designed to resist the gravity and uplift loads from wood I-joists. Sized specifically for wood I-joists, the sides of the IHFL Face Mount Hanger provide lateral support to the I-joist top flange. The IHFL Face Mount Hanger is intended to support wood I-joists with flanges manufactured from sawn lumber or structural composite lumber (SCL). Design values for the IHFL Face Mount Hanger and I-joist flange property requirements are provided in Table 15. The supporting header may be wood I-joist, LVL, LSL, PSL, or solid sawn lumber. The IHFL Face Mount Hanger is cold-formed from No. 18 gage steel, and is prepunched for 10d common nails installed into the header. Uplift resistance is provided by six Seat Cleat® prongs that lock the bottom flange of the I-joist to the hanger, providing a consistent uplift capacity for I-joist of all bottom flange thicknesses without the installation of hanger-to-joist nails. Additional uplift capacity is provided when two joist nails are installed into the joist bottom flange (see Table 15 Footnote 6). Diamond holes in the hanger flanges for hanger-to-header nailing provide for customizable (MIN/MAX) fastening to match the allowable download capacity needed as indicated in Table 15. The IHFL Face Mount Hanger dimensions and typical installation are shown in Figure 15.

3.16 HDQIF Inverted Flange Face Mount Hangers:

The HDQIF Face Mount Inverted Flange Hanger is designed to support headers, joists, and trusses. The HDQIF Face Mount Hanger is cold-formed from No. 14 gage steel; and is prepunched for $^1/_4$-inch-by-3-inch WS3 wood screws into supporting member, and either $^1/_4$-inch-by-$1^1/_2$-inch WS15 wood screws or $^1/_4$-inch-by-3-inch MiTek WS3 wood screws into the supported member. WS Series wood screws are proprietary screws described in ESR-2761 and are shipped with the hangers. See Table 16 and Figure 16 for product dimensions, fastener schedule, allowable loads and a typical installation detail.

3.17 JLIF-TZ Inverted Flange Face Mount Hangers:

The JLIF-TZ Inverted Flange Joist Hanger is designed as a face-mount hanger to support joists of nominal lumber dimensions. The JLIF-TZ is cold-formed from No. 18 gage steel; and is prepunched for 10d or 16d common nails into the header and 10d-by-$1^1/_2$-inch nails into the joist. See Table 17 and Figure 17 for product dimensions, fastener schedule, allowable loads and a typical installation detail.

3.18 MUS Slant Nail Face Mount Joist Hangers:

The MUS Slant Nail Joist Hanger is designed for face-mount applications to provide double shear nailing for joist/truss-to-beam connections. The MUS Slant Nail Joist Hanger is cold-formed from No. 18 gage steel and is prepunched for 10d common nails into both the header and the joist. See Table 18 and Figure 18 for product dimensions, fastener schedule, allowable loads and a typical installation detail.

3.19 Materials:

3.19.1 Steel: The specific types of steel and corrosion protection for each product are described in Table 19 of this report. Minimum steel base-steel thicknesses for the different gages are shown in the following table:

GAGE NO.	MINIMUM BASE-STEEL THICKNESS (inch)
20	0.033
18	0.044
16	0.055
14	0.070
12	0.099

For **SI:** 1 inch = 25.4 mm.

3.19.2 Wood: Wood members must be sawn lumber or structural glued laminated timber with a minimum specific gravity of 0.50, or approved structural engineered lumber (structural composite lumber, alternative strand lumber, or prefabricated wood I-joists) with a minimum equivalent specific gravity of 0.50, unless otherwise noted in the applicable table within this report. Wood members must have a moisture content not exceeding 19 percent (16 percent for structural glued laminated timber and structural engineered lumber products, except as noted in Section 4.1). For connectors installed with nails, the thickness of each wood member must be sufficient such that the specified fasteners do not protrude through the opposite side of the member, unless otherwise permitted in the applicable table within this report. Wood members that are structural engineered lumber must be recognized in, and used in accordance with, a current evaluation report. Refer to Section 3.19.4 for issues related to treated wood.

3.19.3 Fasteners: Required fastener types and sizes for use with the connectors described in this report are specified in this section and Tables 1 through 18. Nails used for connectors described in this report must be bright or hot-dipped galvanized carbon steel nails complying with material requirements, physical properties, tolerances, workmanship, protective coating and finishes, and packaging and package marking requirements specified in ASTM F1667; and must have lengths, diameters and bending yield strengths as shown in the following table:

FASTENER DESIGNATION	FASTENER LENGTH (inches)	SHANK DIAMETER (inch)	MINIMUM REQUIRED F_{yb} (psi)
P-nail[1]	1.375	0.105	100,000
10d x $1^1/_2$	1.5	0.148	90,000
10d Common	3.0	0.148	90,000
16d Common	3.5	0.162	90,000

For **SI:** 1 inch = 25.4 mm, 1 psi = 6.895 kPa.

[1]The fastener designation "P-nail" refers to power-driven nails described in ESR-1539. The fastener must have a minimum diameter, length, and bending yield strength as specified in this table.

Alternatively, nails of other materials or finishes may be used when they are recognized in an ICC-ES evaluation report as having bending yield strength and withdrawal capacity equal to or better than those of a bright carbon steel of the same nominal diameter.

MiTek WS Series screws used for LGU/MGU/HGU and THDHQ hangers are described in ESR-2761.

3.19.4 Use in Treated Wood: Connectors used in contact with preservative-treated or fire-retardant-treated wood must comply with Section 2304.10.6 of the 2024 and 2021 IBC (Section 2304.10.5 of the 2018 and 2015 IBC, and Section 2304.9.5 of the 2012 IBC) and Section R304.3 of the 2024 IRC (Section R317.3 of the 2021, 2018, 2015 and 2012 IRC). The lumber treater or the report holder (MiTek), or both, should be contacted for recommendations on the appropriate level of corrosion resistance to specify for the connectors. Fasteners used in contact with preservative-treated or fire-retardant-treated wood must be hot-dipped galvanized carbon steel nails. Alternatively, nails of other materials and finishes may be used when they are recognized in an ICC-ES evaluation report for use in the applicable treated lumber and have equivalent or greater capacities as those required in this report.

4.0 DESIGN AND INSTALLATION

4.1 Design:

The allowable load capacities in Tables 1 through 18 are based on allowable stress design. The use of the allowable load values for the products listed in Table 19 of this report must comply with all applicable requirements and conditions specified in this report. Tabulated allowable loads are for normal load duration and/or short load duration, based on load duration factors, C_D, in accordance with Section 11.3.2 of the *National Design Specification® for Wood Construction* (NDS) for the 2024, 2021, 2018 and 2015 IBC and IRC (Section 10.3.2 of the NDS for the 2012 IBC and IRC), as indicated in Tables 1 through 18 of this report. No further increases are permitted for load durations other than those specified. Tabulated allowable loads are for connections in wood seasoned to a maximum moisture content of 19 percent (16 percent for structural glued laminated timber and structural engineered lumber products) or less, used under continuously dry conditions and where sustained temperatures are limited to 100°F (37.8°C) or less. When connectors are installed in wood having a moisture content greater than 19 percent (16 percent for engineered wood products), or where the in-service moisture content is expected to exceed this value, the applicable wet service factor, C_M, must be applied. Unless otherwise noted in the tables of this report, the applicable wet service factor, C_M, is as specified in the NDS for lateral loading of dowel-type fasteners. When connectors are installed in wood that will experience sustained exposure to temperatures exceeding 100°F (37.8°C), the allowable loads in this evaluation report must be adjusted by the temperature factor, C_t, specified in Section 11.3.4 of the NDS for the 2024, 2021, 2018 and 2015 IBC and IRC (Section 10.3.4 of the NDS for the 2012 IBC and IRC). Connected wood members must be checked for load-carrying capacity at the connection in accordance with NDS Section 11.1.2 for the 2024, 2021, 2018 and 2015 IBC and IRC (Section 10.1.2 of the NDS for the 2012 IBC and IRC).

4.2 Installation:

Installation of the connectors must be in accordance with this evaluation report and the manufacturer's published installation instructions.

4.3 Special Inspection:

4.3.1 Main Wind Force-Resisting Systems under the IBC: Periodic special inspection must be conducted for components within the main windforce-resisting system, where required in accordance with Sections 1704.2 and 1705.12 of the 2024 and 2021 IBC (Sections 1704.2 and 1705.11 of the 2018 and 2015 IBC and Section 1705.10 of the 2012 IBC).

4.3.2 Seismic Force-Resisting Systems under the IBC: Periodic special inspection must be conducted for components within the seismic force-resisting system, where required in accordance with Sections 1704.2 and 1705.13 of the 2024 and 2021 IBC (Sections 1704.2 and 1705.12 of the 2018 and 2015 IBC and Section 1705.11 of the 2012 IBC).

4.3.3 Installations under the IRC: Special inspections are normally not required for connectors used in structures regulated under the IRC. However, for components and systems requiring an engineered design in accordance with IRC Section R301, periodic special inspection requirements and exemptions must be in accordance with Sections 4.3.1 and 4.3.2 of this report.

5.0 CONDITIONS OF USE:

The MiTek Face Mount Hangers described in this report comply with, or are suitable alternatives to what is specified in, those codes listed in Section 1.0 of this report, subject to the following conditions:

5.1 The connectors must be manufactured, identified and installed in accordance with this report and the manufacturer's published installation instructions. A copy of the manufacturer's published installation instructions must be available at the jobsite at all times during installation. In the event of a conflict between this report and the manufacturer's published installation instructions, this report governs.

5.2 Calculations showing compliance with this report must be submitted to the code official. The calculations must be prepared by a registered design professional where required by the statutes of the jurisdiction in which the project is to be constructed.

5.3 Connected wood members and fasteners must comply with Sections 3.19.2 and 3.19.3, respectively.

5.4 Adjustment factors, noted in Section 4.1 of this report and the applicable codes, must be considered where applicable.

5.5 Use of connectors and fasteners with preservative-treated or fire-retardant-treated lumber must be in accordance with Section 3.19.4.

5.6 The connectors are manufactured under an approved quality control program with inspections by ICC-ES.

6.0 EVIDENCE SUBMITTED

Data in accordance with the ICC-ES Acceptance Criteria for Joist Hangers and Similar Devices (AC13), approved October 2018 (editorially revised February 2024).

7.0 IDENTIFICATION

7.1 The connectors described in this report are identified by the product model (stock) number, the number of the ICC-ES index evaluation report for MiTek (ESR-2685), and by one or more of the following designations: MiTek, USP or USP Structural Connectors.

7.2 The report holder's contact information is the following:

MITEK® INC.
16023 SWINGLEY RIDGE ROAD
CHESTERFIELD, MISSOURI 63017
(800) 328-5934
www.mitek-us.com

TABLE 1—CLPBF BUTTERFLY HANGER ALLOWABLE LOADS[1,2,3,4]

STOCK NO.	JOIST WIDTH (in.)	STEEL GA.	DIMENSIONS			FASTENER SCHEDULE				ALLOWABLE LOADS (lbs)			
			W	H	D	Header		Joist		Download			Uplift
						Qty	Type	Qty	Type	C_D=1.0	C_D=1.15	C_D=1.25	C_D=1.60
CLPBF	$1^1/_2$	18	$1^9/_{16}$	$2^1/_2$	$2^1/_2$	12	10d Common	6	10d x $1^1/_2$	1,340	1,340	1,340	195

For **SI:** 1 inch = 25.4 mm, 1 lb. = 4.45 N.

[1]Allowable loads have been adjusted for load duration factors, C_D, as shown, in accordance with the NDS. The allowable loads do not apply to loads of other durations, and are not permitted to be adjusted for other load durations. See Sections 4.1 and 4.2 for additional design and installation requirements.
[2]See Section 3.19.3 for required fastener dimensions and mechanical properties.
[3]Allowable loads shown are for installations in wood members complying with Section 3.19.2. Wood members must also have a minimum reference compression perpendicular to grain design value, $F_{c\text{-}perp}$, of 625 psi (4.31 MPa).
[4]CLPBF hangers provide torsional resistance, up to a maximum joist depth of 3.5 inches (88.9 mm), where torsional resistance is defined as a moment not less than 75 pounds (334 N) times the depth of the joist, at which the lateral movement of the top or bottom of the joist with respect to the vertical position of the joist is 0.125 inch (3.2 mm).

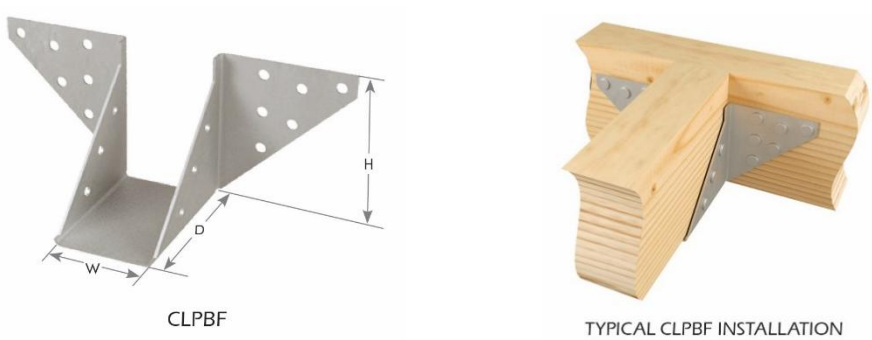

FIGURE 1—CLPBF BUTTERFLY HANGER

TABLE 2—HD FACE MOUNT HANGER ALLOWABLE LOADS[1,2,3,4,5,6] (Continued)

STOCK NO.	STEEL GAGE	HANGER DIMENSIONS (inches)			MIN /MAX	FASTENER SCHEDULE				ALLOWABLE LOADS (lbs)			
						HEADER		JOIST		DOWNLOAD			UPLIFT
		W	H	D		Qty	Type	Qty	Type	C_D = 1.0	C_D = 1.15	C_D = 1.25	C_D = 1.6
HD26	14	1 9/16	3 1/2	2 1/2	min	4	16d Common	2	10d x 1 1/2	615	695	745	335
					max	4	16d Common	4	10d x 1 1/2	615	695	745	585
HD28	14	1 9/16	5 1/4	2 1/2	min	8	16d Common	4	10d x 1 1/2	1,230	1,390	1,490	760
					max	8	16d Common	6	10d x 1 1/2	1,230	1,390	1,490	760
HD210	14	1 9/16	7 3/16	2 1/2	min	10	16d Common	4	10d x 1 1/2	1,540	1,735	1,865	760
					max	14	16d Common	6	10d x 1 1/2	2,155	2,430	2,610	1,170
HD212	14	1 9/16	9 13/16	2 1/2	min	14	16d Common	6	10d x 1 1/2	2,155	2,430	2,610	1,170
					max	20	16d Common	10	10d x 1 1/2	3,080	3,475	3,725	1,510
HD214	14	1 9/16	11 3/4	2 1/2	min	16	16d Common	8	10d x 1 1/2	2,465	2,780	2,980	1,190
					max	24	16d Common	12	10d x 1 1/2	3,695	4,125	4,250	1,510
HD216	14	1 9/16	13 7/16	2 1/2	min	18	16d Common	8	10d x 1 1/2	2,770	3,125	3,355	1,510
					max	26	16d Common	12	10d x 1 1/2	3,930	4,125	4,250	1,900
HD24-2	14	3 1/8	3 1/2	2 1/2	- -	4	16d Common	2	10d Common	615	695	745	365
HD26-2	14	3 1/8	5 1/4	2 1/2	min	8	16d Common	4	10d Common	1,230	1,390	1490	760
					max	12	16d Common	6	10d Common	1,850	2,085	2,235	1,170
HD28-2	14	3 1/8	7 1/8	2 1/2	min	10	16d Common	4	10d Common	1,540	1,735	1,865	780
					max	14	16d Common	6	10d Common	2,155	2,430	2,610	1,170
HD210-2	14	3 1/8	9	2 1/2	min	14	16d Common	6	10d Common	2,155	2,430	2,610	1,170
					max	20	16d Common	10	10d Common	3,080	3,475	3,725	1,950
HD212-2	14	3 1/8	11	2 1/2	min	16	16d Common	8	10d Common	2,465	2,780	2,980	1,305
					max	24	16d Common	12	10d Common	3,695	4,170	4,470	2,340
HD214-2	14	3 1/8	13	2 1/2	min	18	16d Common	8	10d Common	2,770	3,125	3,355	1,510
					max	26	16d Common	12	10d Common	4,005	4,515	4,845	2,340
HD216-2	14	3 1/8	15	2 1/2	min	22	16d Common	10	10d Common	3,390	3,820	4,100	1,950
					max	30	16d Common	14	10d Common	4,620	5,035	5,035	2,735
HD26-3	14	4 5/8	4 1/2	2 1/2	min	8	16d Common	4	10d Common	1,230	1,390	1,490	760
					max	12	16d Common	6	10d Common	1,850	2,085	2,235	1,170
HD28-3	14	4 5/8	6 3/8	2 1/2	min	10	16d Common	4	10d Common	1,540	1,735	1,865	780
					max	14	16d Common	6	10d Common	2,155	2,430	2,610	1,170
HD210-3	14	4 5/8	8 1/4	2 1/2	min	14	16d Common	6	10d Common	2,155	2,430	2,610	1,170
					max	20	16d Common	10	10d Common	3,080	3,475	3,725	1,950
HD212-3	14	4 5/8	10 1/4	2 1/2	min	16	16d Common	8	10d Common	2,465	2,780	2,980	1,305
					max	24	16d Common	12	10d Common	3,695	4,170	4,470	2,340
HD214-3	14	4 5/8	12 1/4	2 1/2	min	18	16d Common	8	10d Common	2,770	3,125	3,355	1,510
					max	26	16d Common	12	10d Common	4,005	4,515	4,845	2,340
HD216-3	14	4 5/8	14 1/4	2 1/2	min	22	16d Common	10	10d Common	3,390	3,820	4,100	1,950
					max	30	16d Common	14	10d Common	4,620	5,035	5,035	2,735
HD28-4	14	6 1/8	7 1/8	2 1/2	min	10	16d Common	4	16d Common	1,540	1,735	1,865	870
					max	14	16d Common	6	16d Common	2,155	2,430	2,610	1,305
HD210-4	14	6 1/8	9 1/4	2 1/2	--	18	16d Common	8	16d Common	2,770	3,125	3,355	1,845
HD34	14	2 9/16	3	2 1/2	min	4	16d Common	2	10d x 1 1/2	615	695	745	335
					max	4	16d Common	4	10d x 1 1/2	615	695	745	585
HD36	14	2 9/16	4 3/4	2 1/2	min	8	16d Common	4	10d x 1 1/2	1,230	1,390	1,490	760
					max	8	16d Common	6	10d x 1 1/2	1,230	1,390	1,490	760
HD38	14	2 9/16	6 11/16	2 1/2	min	10	16d Common	4	10d x 1 1/2	1,540	1,735	1,865	760
					max	14	16d Common	6	10d x 1 1/2	2,155	2,430	2,610	1,170
HD310	14	2 9/16	7 3/8	2 1/2	min	10	16d Common	4	10d x 1 1/2	1,540	1,735	1,865	760
					max	14	16d Common	6	10d x 1 1/2	2,155	2,430	2,610	1,170
HD312	14	2 9/16	9 1/4	2 1/2	min	14	16d Common	6	10d x 1 1/2	2,155	2,430	2,610	1,170
					max	20	16d Common	10	10d x 1 1/2	3,080	3,475	3,725	1,510
HD314	14	2 9/16	11 1/4	2 1/2	min	16	16d Common	8	10d x 1 1/2	2,465	2,780	2,980	1,190
					max	24	16d Common	12	10d x 1 1/2	3,695	4,170	4,435	1,900
HD316	14	2 9/16	13 1/4	2 1/2	min	18	16d Common	8	10d x 1 1/2	2,770	3,125	3,355	1,510
					max	26	16d Common	12	10d x 1 1/2	4,005	4,435	4,435	1,900
HD38-2	14	5 1/8	6 1/8	2 1/2	min	10	16d Common	4	10d Common	1,540	1,735	1,865	780

TABLE 2—HD FACE MOUNT HANGER ALLOWABLE LOADS[1,2,3,4,5,6] (Continued)

STOCK NO.	STEEL GAGE	HANGER DIMENSIONS (inches)			MIN /MAX	FASTENER SCHEDULE				ALLOWABLE LOADS (lbs)			
						HEADER		JOIST		DOWNLOAD			UPLIFT
		W	H	D		Qty	Type	Qty	Type	C_D = 1.0	C_D = 1.15	C_D = 1.25	C_D = 1.6
					max	14	16d Common	6	10d Common	2,155	2,430	2,610	1,170
HD310-2	14	5 1/8	8	2 1/2	min	14	16d Common	6	10d Common	2,155	2,430	2,610	1,170
					max	20	16d Common	10	10d Common	3,080	3,475	3,725	1,510
HD312-2	14	5 1/8	10	2 1/2	min	16	16d Common	8	10d Common	2,465	2,780	2,980	1,305
					max	24	16d Common	12	10d Common	3,695	4,170	4,470	2,340
HD44	14	3 9/16	3 1/4	2 1/2	- -	4	16d Common	2	10d Common	615	695	745	390
HD46	14	3 9/16	5	2 1/2	min	8	16d Common	4	10d Common	1,230	1,390	1,490	760
					max	12	16d Common	6	10d Common	1,850	2,085	2,235	1,170
HD48	14	3 9/16	6 7/8	2 1/2	min	10	16d Common	4	10d Common	1,540	1,735	1,865	780
					max	14	16d Common	6	10d Common	2,155	2,430	2,610	1,170
HD410	14	3 9/16	8 3/4	2 1/2	min	14	16d Common	6	10d Common	2,155	2,430	2,610	1,170
					max	20	16d Common	10	10d Common	3,080	3,475	3,725	1,950
HD412	14	3 9/16	10 3/4	2 1/2	min	16	16d Common	8	10d Common	2,465	2,780	2,980	1,305
					max	24	16d Common	12	10d Common	3,695	4,170	4,470	2,340
HD414	14	3 9/16	12 3/4	2 1/2	min	18	16d Common	8	10d Common	2,770	3,125	3,355	1,510
					max	26	16d Common	12	10d Common	4,005	4,515	4,815	2,340
HD416	14	3 9/16	14 3/4	2 1/2	min	22	16d Common	10	10d Common	3,390	3,820	4,100	1,950
					max	30	16d Common	14	10d Common	4,620	4,990	4,990	2,245
HD418	14	3 9/16	16 1/2	2 1/2	- -	28	16d Common	8	10d Common	4,310	4,815	4,815	1,560
HD66	14	5 1/2	4 1/16	2 1/2	min	8	16d Common	4	16d Common	1,230	1,390	1,490	870
					max	12	16d Common	6	16d Common	1,850	2,085	2,235	1,305
HD68	14	5 1/2	5 15/16	2 1/2	min	10	16d Common	4	16d Common	1,540	1,735	1,865	920
					max	14	16d Common	6	16d Common	2,155	2,430	2,610	1,305
HD610	14	5 1/2	7 13/16	2 1/2	min	14	16d Common	6	16d Common	2,155	2,430	2,610	1,305
					max	20	16d Common	10	16d Common	3,080	3,475	3,725	2,305
HD612	14	5 1/2	9 13/16	2 1/2	min	16	16d Common	8	16d Common	2,465	2,780	2,980	1,305
					max	24	16d Common	12	16d Common	3,695	4,170	4,470	2,765
HD614	14	5 1/2	11 13/16	2 1/2	min	18	16d Common	8	16d Common	2,770	3,125	3,355	1,845
					max	26	16d Common	12	16d Common	4,005	4,515	4,845	2,765
HD616	14	5 1/2	13 13/16	2 1/2	min	22	16d Common	10	16d Common	3,390	3,820	4,100	2,305
					max	30	16d Common	14	16d Common	4,620	4,990	4,990	3,225
HD86	14	7 1/2	4 15/16	2 1/2	min	8	16d Common	4	16d Common	1,230	1,390	1,490	870
					max	10	16d Common	4	16d Common	1,540	1,735	1,865	920
HD88	14	7 1/2	6 13/16	2 1/2	min	10	16d Common	4	16d Common	1,540	1,735	1,865	920
					max	14	16d Common	6	16d Common	2,155	2,430	2,610	1,305
HD810	14	7 1/2	8 3/8	2 1/2	min	14	16d Common	6	16d Common	2,155	2,430	2,610	1,305
					max	18	16d Common	8	16d Common	2,770	3,125	3,355	1,845
HD812	14	7 1/2	10 1/8	2 1/2	min	16	16d Common	6	16d Common	2,465	2,780	2,980	1,305
					max	22	16d Common	8	16d Common	3,390	3,820	4,100	1,845
HD814	14	7 1/2	11 13/16	2 1/2	min	18	16d Common	8	16d Common	2,770	3,125	3,355	1,845
					max	24	16d Common	12	16d Common	3,695	4,170	4,435	2,765
HD816	14	7 1/2	12 3/4	2 1/2	min	20	16d Common	8	16d Common	3,080	3,475	3,725	1,845
					max	26	16d Common	12	16d Common	4,005	4,435	4,435	2,765
HD1770	14	1 13/16	7 1/8	2 1/2	min	12	16d Common	4	10d x 1 1/2	1,850	2,085	2,235	760
					max	16	16d Common	8	10d x 1 1/2	2,465	2,780	2,980	1,190
HD17925	14	1 13/16	9 1/8	2 1/2	min	18	16d Common	6	10d x 1 1/2	2,770	3,125	3,355	1,170
					max	24	16d Common	10	10d x 1 1/2	3,695	4,170	4,320	1,900
HD17112	14	1 13/16	11 3/8	2 1/2	min	22	16d Common	6	10d x 1 1/2	3,390	3,625	3,685	1,170
					max	30	16d Common	12	10d x 1 1/2	4,320	4,515	4,640	1,900
HD1714	14	1 13/16	13 5/16	2 1/2	min	28	16d Common	8	10d x 1 1/2	3,790	3,920	4,005	1,510
					max	36	16d Common	14	10d x 1 1/2	4,580	4,810	4,955	1,900
HD27925	14	2 3/4	9 3/16	2 1/2	min	14	16d Common	6	10d x 1 1/2	2,155	2,430	2,610	1,170
					max	20	16d Common	10	10d x 1 1/2	3,080	3,475	3,725	1,510
HD27112	14	2 3/4	11 3/16	2 1/2	min	16	16d Common	8	10d x 1 1/2	2,465	2,780	2,980	1,190
					max	24	16d Common	12	10d x 1 1/2	3,695	4,170	4,435	1,900
HD2714	14	2 3/4	12 13/16	2 1/2	min	18	16d Common	8	10d x 1 1/2	2,770	3,125	3,355	1,510
					max	26	16d Common	12	10d x 1 1/2	4,005	4,435	4,435	1,900
HD32105	14	3 1/4	9 15/16	2 1/2	min	16	16d Common	6	10d Common	2,465	2,780	2,980	1,170
					max	22	16d Common	10	10d Common	3,390	3,820	4,100	1,950

TABLE 2—HD FACE MOUNT HANGER ALLOWABLE LOADS[1,2,3,4,5,6] (Continued)

STOCK NO.	STEEL GAGE	HANGER DIMENSIONS (inches)			MIN /MAX	FASTENER SCHEDULE				ALLOWABLE LOADS (lbs)			
						HEADER		JOIST		DOWNLOAD			UPLIFT
		W	H	D		Qty	Type	Qty	Type	C_D = 1.0	C_D = 1.15	C_D = 1.25	C_D = 1.6
HD3212	14	3 1/4	11 7/8	2 1/2	min	18	16d Common	8	10d Common	2,770	3,125	3,355	1,510
					max	26	16d Common	12	10d Common	4,005	4,515	4,845	2,340
HD5112	14	5 1/4	9 15/16	2 1/2	min	16	16d Common	8	16d Common	2,465	2,780	2,980	1,305
					max	24	16d Common	12	16d Common	3,695	4,170	4,470	2,765
HD51135	14	5 1/4	12 15/16	2 1/2	min	20	16d Common	10	16d Common	3,080	3,475	3,725	2,305
					max	28	16d Common	14	16d Common	4,310	4,860	5,035	3,225
HD5210	14	5 3/8	7 7/8	2 1/2	min	14	16d Common	6	16d Common	2,155	2,430	2,610	1,305
					max	20	16d Common	10	16d Common	3,080	3,475	3,725	2,305
HD5212	14	5 3/8	9 7/8	2 1/2	min	16	16d Common	8	16d Common	2,465	2,780	2,980	1,305
					max	24	16d Common	12	16d Common	3,695	4,170	4,470	2,765
HD5214	14	5 3/8	11 7/8	2 1/2	min	18	16d Common	8	16d Common	2,770	3,125	3,355	1,845
					max	26	16d Common	12	16d Common	4,005	4,515	4,845	2,765
HD5216	14	5 3/8	13 7/8	2 1/2	min	22	16d Common	10	16d Common	3,390	3,820	4,100	2,305
					max	30	16d Common	14	16d Common	4,620	4,990	4,990	3,225
HD62117	14	6 1/4	11 3/4	2 1/2	- -	24	16d Common	6	10d Common	3,695	4,170	4,435	1,170
Hd71117	14	7 1/8	11 3/4	2 1/2	- -	26	16d Common	6	10d Common	4,005	4,435	4,435	1,170
HD7100	14	7 1/8	9	2 1/2	min	14	16d Common	6	16d Common	2,155	2,430	2,610	1,305
					max	18	16d Common	8	16d Common	2,770	3,125	3,355	1,845
HD7120	14	7 1/8	10 11/16	2 1/2	min	16	16d Common	6	16d Common	2,465	2,780	2,980	1,305
					max	22	16d Common	8	16d Common	3,390	3,820	4,100	1,845
HD7140	14	7 1/8	12 15/16	2 1/2	min	20	16d Common	8	16d Common	3,080	3,475	3,725	1,845
					max	26	16d Common	12	16d Common	4,005	4,435	4,435	2,765
HD7160	14	7 1/8	15 5/8	2 1/2	- -	24	16d Common	8	10d Common	3,695	4,170	4,435	1,560
HD7180	14	7 1/8	17 3/4	2 1/2	- -	28	16d Common	8	10d Common	4,310	4,860	4,940	1,560
HD77117	14	7 1/8	11 3/4	2 1/2	- -	26	16d Common	6	10d Common	4,005	4,435	4,435	1,170
HD83117	14	8 5/16	11 3/4	2 1/2	- -	26	16d Common	6	10d Common	4,005	4,435	4,435	1,170
HD95117	14	9 1/2	11 3/4	2 1/2	- -	30	16d Common	6	10d Common	4,620	4,990	4,990	1,170

For **SI:** 1 inch = 25.4 mm, 1 lbf = 4.45 N, 1 psi = 6.895 kPa.

[1]Allowable loads have been adjusted for load duration factors, C_D, as shown, in accordance with the NDS. The allowable loads do not apply to loads of other durations, and are not permitted to be adjusted for other load durations. See Sections 4.1 and 4.2 for additional design and installations requirements.

[2]See Section 3.19.3 for required fastener dimensions and mechanical properties.

[3] For minimum (MIN) nailing configuration, all round nail holes must be filled with nails. For maximum (MAX) nailing configuration, all round and diamond holes must be filled with nails. The joist hangers are not intended for use with intermediate numbers of fasteners.

[4]Allowable loads shown are for installations in wood members complying with Section 3.19.2. Wood members must also have a minimum reference compression perpendicular to grain design value, $F_{c\text{-perp}}$, 625 psi (4.31 MPa).

[5]HD hangers provide torsional resistance, up to a maximum joist depth of H + 1.0 inch (H + 25.4 mm), where torsional resistance is defined as a moment not less than 75 pounds (335 N) times the depth of the joist, at which the lateral movement of the top or bottom of the joist with respect to the vertical position of the joist is 0.125 inch (3.2 mm).

[6]HDIF inverted flange hangers are available in widths of 2.25 inches (57.2 mm) or greater at the same design loads as a corresponding HD models.

FIGURE 2—HD FACE MOUNT HANGER

TABLE 3—HUS SLANT NAIL JOIST HANGER ALLOWABLE LOADS[1,2,3,4,6]

STOCKNO.	STEEL GAGE	DIMENSIONS (in.)				FASTENER SCHEDULE				ALLOWABLE DESIGN LOADS (lbs)			
		W	H	D	A	Header		Joist[5]		Download			Uplift
						Qty	Type	Qty	Type	C_D = 1.0	C_D = 1.15	C_D = 1.25	C_D = 1.6
HUS26	16	$1^5/_8$	$5^7/_{16}$	3	2	14	16d Common	6	16d Common	2,760	3,140	3,400	2,045
HUS28	16	$1^5/_8$	$7^3/_{16}$	3	2	22	16d Common	8	16d Common	4,170	4,745	5,125	2,990
HUS210	16	$1^5/_8$	$9^3/_{16}$	3	2	30	16d Common	10	16d Common	5,455	5,825	6,060	4,110
HUS175	16	$1^{13}/_{16}$	$5^3/_8$	3	2	14	16d Common	6	16d Common	2,760	3,140	3,400	2,045
HUS177	16	$1^{13}/_{16}$	$7^1/_8$	3	2	22	16d Common	8	16d Common	4,170	4,745	5,125	2,990
HUS179	16	$1^{13}/_{16}$	$9^1/_8$	3	2	30	16d Common	10	16d Common	5,580	6,060	6,060	4,110
HUS24-2	14	$3^1/_8$	$3^7/_{16}$	2	1	4	16d Common	2	16d Common	850	965	1,040	765
HUS26-2	14	$3^1/_8$	$5^1/_4$	2	1	4	16d Common	4	16d Common	1,085	1,235	1,330	1,170
HUS28-2	14	$3^1/_8$	$7^1/_8$	2	1	6	16d Common	6	16d Common	1,625	1,850	1,880	2,420
HUS210-2	14	$3^1/_8$	$9^1/_8$	2	1	8	16d Common	8	16d Common	2,170	2,465	2,660	2,420
HUS212-2	14	$3^1/_8$	$11^1/_8$	2	1	10	16d Common	10	16d Common	2,710	3,080	3,325	3,615
HUS46	14	$3^5/_8$	5	2	1	4	16d Common	4	16d Common	1,085	1,235	1,330	1,170
HUS48	14	$3^5/_8$	7	2	1	6	16d Common	6	16d Common	1,625	1,850	1,880	2,420
HUS410	14	$3^5/_8$	$8^7/_8$	2	1	8	16d Common	8	16d Common	2,170	2,465	2,660	2,420
HUS412	14	$3^5/_8$	$10^7/_8$	2	1	10	16d Common	10	16d Common	2,710	3,080	3,325	3,615

For **SI:** 1 inch = 25.4 mm, 1 lbf = 4.45 N.

[1]Allowable loads have been adjusted for load duration factors, C_D, as shown, in accordance with the NDS. The allowable loads do not apply to loads of other durations, and are not permitted to be adjusted for other load durations. See Sections 4.1 and 4.2 for additional design and installation requirements.

[2]Allowable loads shown are for installations in wood members complying with Section 3.19.2. Wood members must also have a minimum reference compression perpendicular to grain design value, $F_{c\text{-}perp}$, of 625 psi (4.31 MPa).

[3]See Section 3.19.3 for required fastener dimensions and mechanical properties.

[4]HUS hangers provide torsional resistance, where torsional resistance is defined as a moment not less than 75 pounds (334 N) times the depth of the joist, at which the lateral movement of the top or bottom of the joist with respect to the vertical position of the joist is 0.125 inch (3.2 mm).

[5]Joist nails must be driven horizontally into the joist at an angle of 30- to 45-degrees from normal, such that they penetrate through the joist and into the header.

[6]HUS-IF inverted flange hangers are available in widths of $2^1/_4$ inches or greater at the same design loads as corresponding HUS models.

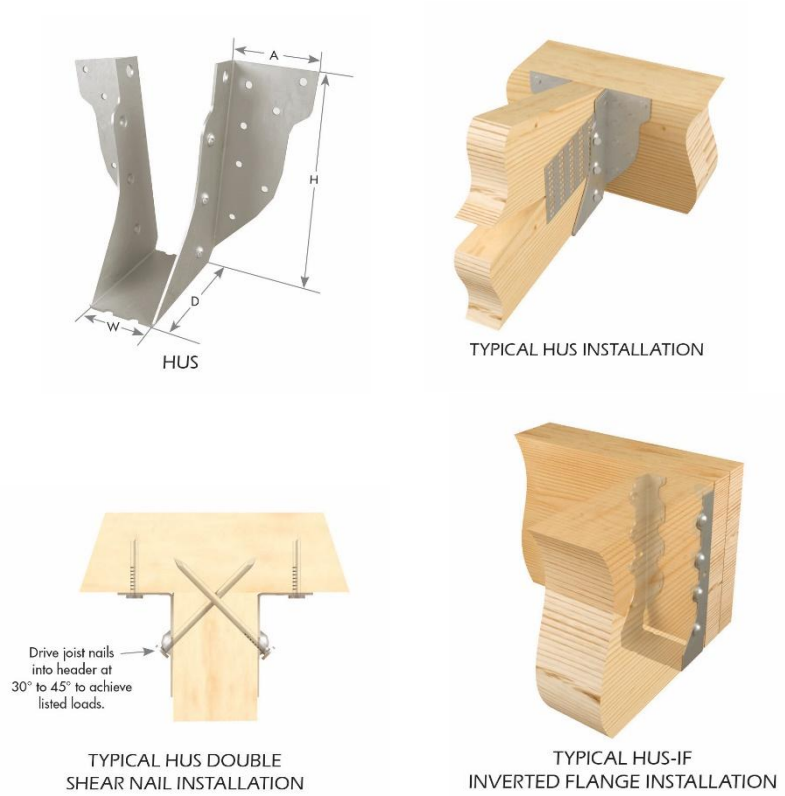

FIGURE 3—HUS SLANT NAIL JOIST HANGER

TABLE 4—JL STANDARD JOIST HANGER ALLOWABLE LOADS[1,2,3,4]

STOCK NO.	STEEL GAGE	DIMENSIONS (inches)			FASTENER SCHEDULE				ALLOWABLE LOADS (lbs)			
					Header		Joist					
					Qty	Type	Qty	Type	Download			Uplift
		W	H	D					C_D = 1.0	C_D = 1.15	C_D = 1.25	C_D = 1.6
JL24	20	$1^9/_{16}$	3	$1^1/_2$	4	10d Common	2	$10dx1^1/_2$	470	540	580	295
					4	16d Common	2	$10dx1^1/_2$	560	640	695	295
JL26	20	$1^9/_{16}$	$4^3/_4$	$1^1/_2$	6	10d Common	4	$10dx1^1/_2$	710	805	870	600
					6	16d Common	4	$10dx1^1/_2$	840	960	1,045	600
JL28	20	$1^9/_{16}$	$6^3/_8$	$1^1/_2$	10	10d Common	6	$10dx1^1/_2$	1,180	1,345	1,450	815
					10	16d Common	6	$10dx1^1/_2$	1,400	1,600	1,740	815
JL210	20	$1^9/_{16}$	$8^1/_4$	$1^1/_2$	14	10d Common	8	$10dx1^1/_2$	1,650	1,885	2,030	1,030
					14	16d Common	8	$10dx1^1/_2$	1,960	2,040	2,040	1,030

For **SI:** 1 inch = 25.4 mm, 1 lbf = 4.45 N, 1 psi =6.895 kPa.

[1]Allowable loads have been adjusted for load duration factors, C_D, as shown, in accordance with the NDS. The allowable loads do not apply to loads of other durations, and are not permitted to be adjusted for other load durations. See Sections 4.1 and 4.2 for additional design and installations requirements.
[2]See Section 3.19.3 for required fastener dimensions and mechanical properties.
[3]Allowable loads shown are for installations in wood members complying with Section 3.19.2. Wood members must also have a minimum reference compression perpendicular to grain design value, $F_{c\text{-}perp}$, of 625 psi (4.31 MPa).
[4]JL hangers provide torsional resistance, up to a maximum joist depth of H + 1.0 inch (H + 25.4 mm), where torsional resistance is defined as a moment not less than 75 pounds (334 N) times the depth of the joist, at which the lateral movement of the top or bottom of the joist with respect to the vertical position of the joist is 0.125 inch (3.2 mm).

FIGURE 4—JL STANDARD JOIST HANGERS

TABLE 5—JN AND JNE POWER NAIL HANGER ALLOWABLE LOADS[1,2]

STOCK NO.	JOIST WIDTH	STEEL GAGE	Dimensions (in.)			Fastener Schedule[3,4,5]				Allowable Loads (lbs)[6]			
						Header		Joist		Download			Uplift
			W	H	D	Qty	Type	Qty	Type	C_D=1.0	C_D=1.15	C_D=1.25	C_D=1.6
JN26-2	(2) $1^1/_2$	18	$3^1/_{16}$	$5^3/_8$	$1^5/_8$	8	P-nail	6	P-nail	490	560	610	585
						10	P-nail	6	P-nail	610	700	765	585
						12	P-nail	6	P-nail	730	840	915	585
						14	P-nail	6	P-nail	855	980	1,070	585
JN28-2	(2) $1^1/_2$	18	$3^1/_{16}$	$7^1/_8$	$1^5/_8$	16	P-nail	6	P-nail	975	1,120	1,220	585
						18	P-nail	6	P-nail	1,100	1,265	1,375	585
						20	P-nail	6	P-nail	1,220	1,405	1,525	585
						22	P-nail	6	P-nail	1,340	1,545	1,680	585
						24	P-nail	6	P-nail	1,465	1,685	1,830	585
JN26E	$1^1/_2$	20	$1^9/_{16}$	$5^1/_4$	2	8	P-nail	4	P-nail	480	550	600	305
						10	P-nail	4	P-nail	600	690	750	305
						12	P-nail	4	P-nail	720	830	900	305
JN28E	$1^1/_2$	20	$1^9/_{16}$	$6^3/_4$	2	14	P-nail	4	P-nail	840	965	1,050	305
JN210E	$1^1/_2$	20	$1^9/_{16}$	$8^1/_4$	2	16	P-nail	4	P-nail	960	1,105	1,200	305
						18	P-nail	4	P-nail	1,080	1,240	1,310	305
						20	P-nail	4	P-nail	1,325	1,325	1,325	305

For **SI:** 1 inch = 25.4 mm, 1 lbf = 4.45 N.

[1]Allowable loads have been adjusted for load duration factors, C_D, as shown, in accordance with the NDS. The allowable loads do not apply to loads of other durations, and are not permitted to be adjusted for other load durations. See Sections 4.1 and 4.2 for additional design and installation requirements.
[2]Allowable loads shown are for installations in wood members complying with Section 3.19.2.
[3]The fastener designation "P-nail" refers to power-driven nails described in ESR-1539P, and must have a minimum diameter, length, and bending yield strength as specified in Section 3.19.3 of this report.
[4]Fasteners must be driven in such a way as firmly seats the nail head against the hanger steel, without embedding the nail head through the plane of the metal surface, or otherwise punching through.
[5]The quantity of nails installed must be equally distributed to both sides of the hanger. The nails must be located within designated prepunched nailing areas at one inch (25.4 mm) spacing in a row, with the vertical rows spaced at $^3/_8$ inch (9.53 mm); also, nails must be no less than $^5/_{16}$ inch (7.94 mm) from any hanger edge.
[6]JN and JNE hangers provide torsional resistance, up to a maximum joist depth of 10 inches (254 mm), where torsional resistance is defined as a moment not less than 75 pounds (334 N) times the depth of the joist, at which the lateral movement of the top or bottom of the joist with respect to the vertical position of the joist is 0.125 inch (3.2 mm).

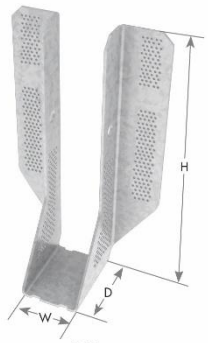

JNE

TYPICAL JN INSTALLATION

FIGURE 5—JN AND JNE POWER NAIL HANGERS

TABLE 6—JUS SLANT NAIL JOIST HANGER ALLOWABLE LOADS[1,2,3,4]

STOCK NO.	STEEL GAGE	DIMENSIONS (in.)				FASTENER SCHEDULE				ALLOWABLE DESIGN LOADS (lbs)			
		W	H	D	A	Header		Joist		Download			Uplift
						Qty	Type	Qty	Type	C_D = 1.0	C_D = 1.15	C_D = 1.25	C_D = 1.6
JUS24	18	$1^9/_{16}$	$3^1/_8$	$1^3/_4$	1	4	10d Common	2	10d Common	675	775	835	660
JUS26	18	$1^9/_{16}$	$4^{13}/_{16}$	$1^3/_4$	1	4	10d Common	4	10d Common	870	1,000	1,080	1,050
JUS28	18	$1^9/_{16}$	$6^5/_8$	$1^3/_4$	1	6	10d Common	4	10d Common	1,110	1,270	1,375	1,050
JUS210	18	$1^9/_{16}$	$7^3/_4$	$1^3/_4$	1	8	10d Common	4	10d Common	1,350	1,545	1,670	1,050
JUS36	18	$2^9/_{16}$	$5^1/_4$	2	1	4	16d Common	4	16d Common	1,040	1,185	1,290	1,270
JUS38	18	$2^9/_{16}$	$6^3/_4$	2	1	6	16d Common	4	16d Common	1,325	1,510	1,645	1,270
JUS310	18	$2^9/_{16}$	$9^1/_8$	2	1	8	16d Common	6	16d Common	1,845	2,105	2,290	2,345
JUS24-2	18	$3^1/_8$	$3^7/_{16}$	2	1	4	16d Common	2	16d Common	805	900	900	660
JUS26-2	18	$3^1/_8$	$5^1/_4$	2	1	4	16d Common	4	16d Common	1,040	1,185	1,290	1,270
JUS28-2	18	$3^1/_8$	$7^1/_8$	2	1	6	16d Common	4	16d Common	1,325	1,510	1,645	1,270
JUS210-2	18	$3^1/_8$	$9^1/_8$	2	1	8	16d Common	6	16d Common	1,845	2,105	2,290	2,345
JUS214-2	18	$3^1/_8$	$13^1/_8$	2	1	12	16d Common	6	16d Common	2,420	2,755	2,830	2,345
JUS44	18	$3^5/_8$	$3^1/_4$	2	1	4	16d Common	2	16d Common	780	780	780	660
JUS46	18	$3^5/_8$	5	2	1	4	16d Common	4	16d Common	1,040	1,185	1,290	1,270
JUS48	18	$3^5/_8$	$6^7/_8$	2	1	6	16d Common	4	16d Common	1,325	1,510	1,645	1,270
JUS410	18	$3^5/_8$	$8^7/_8$	2	1	8	16d Common	6	16d Common	1,845	2,105	2,290	2,345
JUS412	18	$3^5/_8$	$10^7/_8$	2	1	10	16d Common	6	16d Common	2,130	2,405	2,405	2,345
JUS414	18	$3^5/_8$	$12^7/_8$	2	1	12	16d Common	6	16d Common	2,405	2,405	2,405	2,345
JUS24-3	18	$4^5/_8$	$2^3/_4$	2	1	4	16d Common	2	16d Common	805	900	900	660
JUS26-3	18	$4^5/_8$	$4^1/_2$	2	1	4	16d Common	4	16d Common	1,040	1,185	1,290	1,270
JUS28-3	18	$4^5/_8$	$6^3/_8$	2	1	6	16d Common	4	16d Common	1,325	1,510	1,645	1,270
JUS210-3	18	$4^5/_8$	$8^3/_8$	2	1	8	16d Common	6	16d Common	1,845	2,105	2,290	2,345
JUS212-3	18	$4^5/_8$	$10^3/_8$	2	1	10	16d Common	6	16d Common	2,130	2,405	2,405	2,345
JUS214-3	18	$4^5/_8$	$12^3/_8$	2	1	12	16d Common	6	16d Common	2,405	2,405	2,405	2,345

For **SI:** 1 inch = 25.4 mm, 1 lbf = 4.45 N.

[1]Allowable loads have been adjusted for load duration factors, C_D, as shown, in accordance with the NDS. The allowable loads do not apply to loads of other durations, and are not permitted to be adjusted for other load durations. See Sections 4.1 and 4.2 for additional design and installation requirements.
[2]Allowable loads shown are for installations in wood members complying with Section 3.19.2. Wood members must also have a minimum reference compression perpendicular to grain design value, $F_{c\text{-}perp}$, of 625 psi (4.31 MPa).
[3]See Section 3.19.3 for required fastener dimensions and mechanical properties.
[4]JUS hangers provide torsional resistance, up to a maximum joist depth of H + 1.0 inch (H + 25.4 mm) where torsional resistance is defined as a moment not less than 75 pounds (334 N) times the depth of the joist, at which the lateral movement of the top or bottom of the joist with respect to the vertical position of the joist is 0.125 inch (3.2 mm).
[5]Joist nails must be driven horizontally into the joist at an angle of 30- to 45-degrees from normal, such that they penetrate through the joist and into the header.

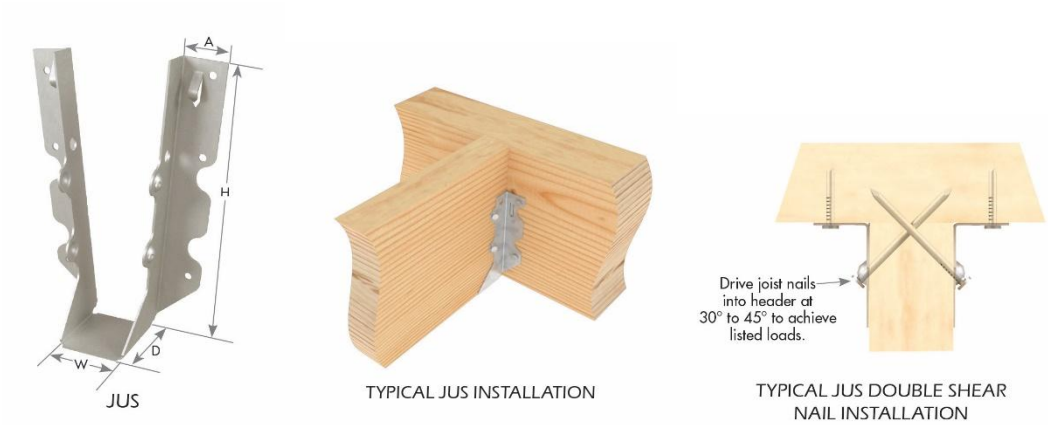

FIGURE 6—JUS SLANT NAIL JOIST HANGER

ICC-ES® Most Widely Accepted and Trusted

TABLE 7—SUH JOIST HANGER ALLOWABLE LOADS[1,2,3]

STOCK NO.	STEEL GAGE	DIMENSIONS (in)				FASTENER SCHEDULE			ALLOWABLE LOADS (lbs)						
									Download						Uplift
						Header	Joist		16d Common Nails Into Header			10d Common Nails Into Header			
		W	H	D	A	Qty	Qty	Type	C_D = 1.0	C_D = 1.15	C_D = 1.25	C_D = 1.0	C_D = 1.15	C_D = 1.25	C_D = 1.6
SUH24	16	1 9/16	3 1/4	2	1 3/16	4	2	10dx1 1/2	590	665	720	500	560	605	380
SUH26	16	1 9/16	5 1/8	2	1 3/16	6	4	10dx1 1/2	880	1,000	1,080	750	840	910	755
SUH28	16	1 9/16	6 5/8	2	1 3/16	8	6	10dx1 1/2	1,175	1,335	1,440	1,000	1,120	1,210	875
SUH210	16	1 9/16	8	2	1 3/16	10	6	10dx1 1/2	1,470	1,670	1,800	1,250	1,405	1,515	1,135
SUH214	16	1 9/16	10	2	1 1/8	12	8	10dx1 1/2	1,765	2,000	2,160	1,500	1,685	1,815	1,510
SUH1710	16	1 13/16	7 7/8	2	1 3/16	10	6	10dx1 1/2	1,470	1,670	1,800	1,250	1,405	1,515	1,135
SUH1714	16	1 13/16	9 7/8	2	1 3/16	12	8	10dx1 1/2	1,765	2,000	2,000	1,500	1,685	1,815	1,510
SUH24R	16	2	3 1/16	2	1 1/8	4	2	10dx1 1/2	590	665	720	500	560	605	380
SUH26R	16	2	4 15/16	2	1 3/16	6	4	10dx1 1/2	880	1,000	1,080	750	840	910	755
SUH28R	16	2	6 7/16	2	1 1/8	8	6	10dx1 1/2	1,175	1,335	1,440	1,000	1,120	1,210	875
SUH210R	16	2	7 13/16	2	1 1/8	10	6	10dx1 1/2	1,470	1,670	1,800	1,250	1,405	1,515	1,135
SUH214R	16	2	9 13/16	2	1 1/8	12	8	10dx1 1/2	1,765	2,000	2,160	1,500	1,685	1,815	1,510
SUH2310	16	2 3/8	8 15/16	2	1 3/16	16	6	10dx1 1/2	2,350	2,585	2,585	2,000	2,245	2,420	1,135
SUH2314	16	2 3/8	10 5/8	2	1 3/16	18	6	10dx1 1/2	2,585	2,585	2,585	2,250	2,525	2,725	1,135
SUH34	16	2 9/16	3 3/8	2	1 1/8	6	2	10dx1 1/2	880	1,000	1,080	750	840	910	380
SUH36	16	2 9/16	5 5/16	2	1 1/8	10	4	10dx1 1/2	1,470	1,670	1,800	1,250	1,405	1,515	755
SUH310	16	2 9/16	8 7/8	2	1 1/8	16	6	10dx1 1/2	2,350	2,585	2,585	2,000	2,245	2,420	1,135
SUH314	16	2 9/16	10 9/16	2	1 1/8	18	6	10dx1 1/2	2,645	3,000	3,240	2,250	2,525	2,725	1,135
SUH2610	16	2 11/16	8 13/16	2	1 3/16	16	6	10dx1 1/2	2,350	2,670	2,880	2,000	2,245	2,420	1,135
SUH2614	16	2 11/16	10 1/2	2	1 3/8	18	6	10dx1 1/2	2,645	3,000	3,240	2,250	2,525	2,725	1,135
SUH24-2	16	3 1/8	3 1/8	2	1 1/8	6	2	10dC	880	1,000	1,080	750	840	910	380
SUH26-2	16	3 1/8	5 1/16	2	1 1/8	10	4	10dC	1,470	1,670	1,800	1,250	1,405	1,515	755
SUH28-2	16	3 1/8	6 1/4	2	1 1/8	12	4	10dC	1,765	2,000	2,000	1,500	1,685	1,815	755
SUH210-2	16	3 1/8	8 9/16	2	1 1/8	16	6	10dC	2,350	2,670	2,880	2,000	2,245	2,420	1,135
SUH214-2	16	3 1/8	10 1/4	2	1 1/8	18	6	10dC	2,645	3,000	3,240	2,250	2,525	2,725	1,135
SUH44	16	3 9/16	2 7/8	2	1 1/8	6	2	10dC	880	1,000	1,080	750	840	910	380
SUH46	16	3 9/16	4 13/16	2	1 1/8	10	4	10dC	1,470	1,670	1,800	1,250	1,405	1,515	755
SUH48	16	3 9/16	6 1/16	2	1 1/8	12	4	10Dc	1,765	2,000	2,000	1,500	1,685	1,815	755
SUH410	16	3 9/16	8 3/8	2	1 1/8	16	6	10dC	2,350	2,670	2,880	2,000	2,245	2,420	1,135
SUH414	16	3 9/16	10 1/16	2	1 1/8	18	6	10dC	2,645	3,000	3,240	2,250	2,525	2,725	1,135
SUH44R	16	4	2 11/16	2	1 1/8	6	2	16dC	880	1,000	1,080	750	840	910	450
SUH46R	16	4	4 11/16	2	1 1/8	8	4	16dC	1,175	1,335	1,440	1,000	1,120	1,210	875
SUH410R	16	4	8 3/16	2	2	14	6	16dC	2,060	2,335	2,520	1,750	1,965	2,120	1,220
SUH26-3	16	4 5/8	5 1/4	2	1	8	2	10dC	1,175	1,335	1,440	1,000	1,120	1,210	380
SUH28-3	16	4 5/8	7 1/8	2 3/4	1	10	6	10Dc	1,470	1,670	1,800	1,250	1,405	1,515	1,135
SUH210-3	16	4 5/8	8 3/8	2	1	14	6	10dC	2,000	2,000	2,000	1,750	1,965	2,000	1,135
SUH2310-2	16	4 3/4	8 3/8	2	1 3/16	14	6	10dC	2,060	2,335	2,520	1,750	1,965	2,120	1,135
SUH2314-2	16	4 3/4	10	2	1 3/16	16	6	10dC	2,350	2,670	2,880	2,000	2,245	2,420	1,135
SUH310-2	16	5 1/8	9	2	1 5/8	14	6	10dC	2,060	2,335	2,520	1,750	1,965	2,120	1,135
SUH66	16	5 1/2	5	2	1	8	4	10dC	1,175	1,335	1,440	1,000	1,120	1,210	755
SUH610	16	5 1/2	9	2	1	14	6	10dC	2,060	2,335	2,520	1,750	1,965	2,120	1,135
SUH66R	16	6	5	2	1	8	4	16dC	1,175	1,335	1,440	1,000	1,120	1,210	875
SUH610R	16	6	9	2	1	14	6	16dC	2,060	2,335	2,520	1,750	1,965	2,120	1,220

For **SI:** 1 inch = 25.4 mm, 1 lbf = 4.45 N.

[1]Allowable loads have been adjusted for load duration factors, C_D, as shown, in accordance with the NDS. The allowable loads do not apply to loads of other durations, and are not permitted to be adjusted for other load durations. See Sections 4.1 and 4.2 for additional design and installation requirements.
[2]Allowable loads shown are for installations in wood members complying with Section 3.19.2. Wood members must also have a minimum reference compression perpendicular to grain design value, $F_{c\text{-}perp}$, of 625 psi (4.31 MPa).
[3]See Section 3.19.3 for required fastener dimensions and mechanical properties. 10dC refers to 10d Common and 16dC refers to 16d Common nails.

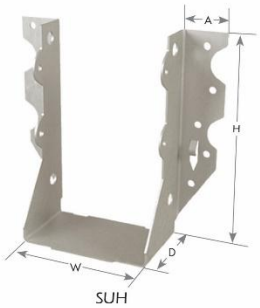

FIGURE 7—SUH JOIST HANGER

TABLE 8—THD FACE MOUNT HANGER ALLOWABLE LOADS[1,2,3,4,5]

STOCK NO.	STEEL GAGE	DIMENSIONS (in.)			FASTENER SCHEDULE				ALLOWABLE LOADS (lbs)			
					Header		Joist		Download			Uplift
		W	H	D	Qty	Type	Qty	Type	C_D = 1.0	C_D = 1.15	C_D = 1.25	C_D = 1.60
THD26	16	$1^5/_8$	$5^1/_{16}$	3	18	16d Common	12	$10dx1^1/_2$	2,645	3,000	3,240	2,265
THD26max	16	$1^5/_8$	$5^1/_{16}$	3	20	16d Common	20	$10dx1^1/_2$	2,940	3,240	3,240	2,315
THD28	16	$1^5/_8$	7	3	28	16d Common	16	$10dx1^1/_2$	4,115	4,200	4,200	2,315
THD28max	16	$1^5/_8$	7	3	28	16d Common	26	$10dx1^1/_2$	4,115	4,670	4,975	2,315
THD210	16	$1^5/_8$	9	3	38	16d Common	20	$10dx1^1/_2$	5,315	5,620	5,660	3,775
THD210max	16	$1^5/_8$	9	3	38	16d Common	32	$10dx1^1/_2$	5,585	6,145	6,145	4,035
THD175	14	$1^7/_8$	5	3	18	16d Common	12	$10dx1^1/_2$	2,770	3,125	3,355	2,315
THD177	14	$1^7/_8$	$6^7/_8$	3	28	16d Common	16	$10dx1^1/_2$	4,310	4,860	5,005	2,315
THD179	14	$1^7/_8$	$8^7/_8$	3	38	16d Common	20	$10dx1^1/_2$	5,850	6,250	6,455	3,905
THD26-2	14	$3^7/_{16}$	$5^3/_8$	3	18	16d Common	12	10d Common	2,770	3,125	3,355	2,340
THD28-2	14	$3^7/_{16}$	$7^1/_8$	3	28	16d Common	16	10d Common	4,310	4,860	5,005	2,595
THD210-2	14	$3^7/_{16}$	$9^1/_8$	3	38	16d Common	20	10d Common	5,850	6,600	7,045	3,905
THD210-3	12	$5^1/_8$	9	3	38	16d Common	20	10d Common	6,535	7,255	7,745	4,035
THD210-4	12	$6^3/_4$	9	3	38	16d Common	20	10d Common	6,535	7,255	7,745	4,035
THD46	14	$3^5/_8$	$5^5/_{16}$	3	18	16d Common	12	10d Common	2,770	3,125	3,355	2,340
THD48	14	$3^5/_8$	$7^1/_{16}$	3	28	16d Common	16	10d Common	4,310	4,860	5,005	2,595
THD410	14	$3^5/_8$	$9^1/_{16}$	3	38	16d Common	20	10d Common	5,850	6,600	7,045	3,905
THD412	14	$3^5/_8$	11	3	48	16d Common	20	10d Common	7,045	7,045	7,045	3,905
THD414	14	$3^5/_8$	$12^7/_8$	3	58	16d Common	20	10d Common	7,045	7,045	7,045	3,905
THD610	12	$5^1/_2$	9	3	38	16d Common	20	10d Common	6,535	7255	7,745	4,035
THD612	12	$5^1/_2$	11	3	48	16d Common	20	10d Common	8,255	8,435	8,435	4,035
THD614	12	$5^1/_2$	$12^7/_8$	3	58	16d Common	20	10d Common	8,435	8,435	8,435	4,035
THD7210	12	$7^1/_4$	9	3	38	16d Common	20	10d Common	6,535	7,255	7,745	4,035

For **SI:** 1 inch = 25.4 mm, 1 lbf = 4.45 N, 1 psi = 6.895 kPa.

[1]Allowable loads have been adjusted for load duration factors, C_D, as shown, in accordance with the NDS. The allowable loads do not apply to loads of other durations, and are not permitted to be adjusted for other load durations. See Sections 4.1 and 4.2 for additional design and installations requirements.
[2]See Section 3.19.3 for required fastener dimensions and mechanical properties.
[3]Allowable loads shown are for installations in wood members complying with Section 3.19.2. Wood members must also have a minimum reference compression perpendicular to grain design value, $F_{c\text{-}perp}$, of 625 psi (4.31 MPa).
[4]THD hangers provide torsional resistance, up to a maximum joist depth of H + 1.0 inch (H + 25.4 mm), where torsional resistance is defined as a moment not less than 75 pounds (334 N) times the depth of the joist, at which the lateral movement of the top or bottom of the joist with respect to the vertical position of the joist is 0.125 inch (3.2 mm).
[5]Some THD models feature nail holes along the bend line that must be filled with nails, driven into the header at a 45º angle, to achieve the tabulated allowable loads.

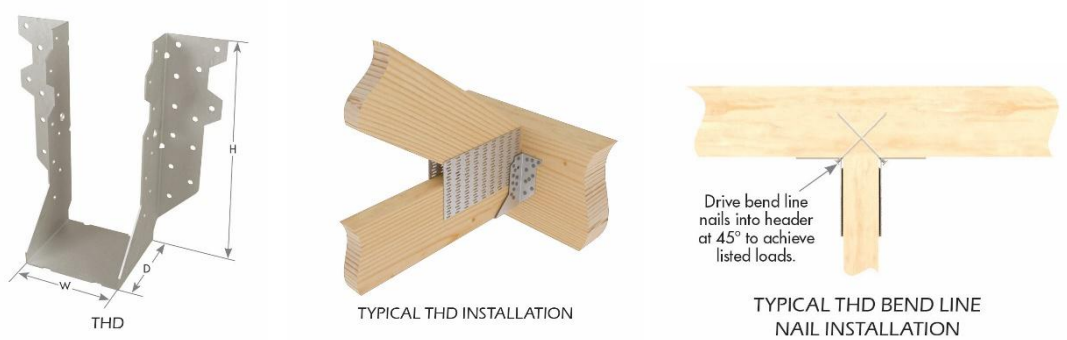

FIGURE 8—THD FACE MOUNT HANGER

TABLE 9—THDH FACE MOUNT HANGER ALLOWABLE LOADS[1,2,3,4]

STOCK NO.	STEEL GAGE	DIMENSIONS (in.)			FASTENER SCHEDULE				ALLOWABLE LOADS (lbs)			
					Header		Joist		Download			Uplift
		W	H	D	Qty	Type	Qty	Type	C_D = 1.0	C_D = 1.15	C_D = 1.25	C_D = 1.6
THDH26	12	$1^5/_8$	$5^7/_{16}$	5	20	16d Common	8	16d Common	4,375	4,895	5,180	2,805
THDH28	12	$1^5/_8$	$7^3/_{16}$	5	36	16d Common	12	16d Common	7,595	8,175	8,175	4,345
THDH210	12	$1^5/_8$	$9^3/_{16}$	5	46	16d Common	16	16d Common	9,310	9,710	9,710	5,290
THDH27925	12	$2^3/_4$	$9^1/_8$	4	46	16d Common	12	16d Common	9,020	9,020	9,020	4,345
THDH27112	12	$2^3/_4$	$10^7/_8$	4	56	16d Common	14	16d Common	9,710	9,710	9,710	4,345
THDH2714	12	$2^3/_4$	$12^1/_4$	4	66	16d Common	16	16d Common	11,185	11,325	11,325	5,290
THDH26-2	12	$3^7/_{16}$	$5^3/_8$	4	20	16d Common	8	16d Common	4,375	4,895	5,180	2,805
THDH28-2	12	$3^7/_{16}$	$7^1/_8$	4	36	16d Common	10	16d Common	7,360	8,175	8,175	3,000
THDH210-2	12	$3^7/_{16}$	$9^1/_8$	4	46	16d Common	12	16d Common	9,020	9,020	9,020	4,345
THDH212-2	12	$3^3/_8$	$10^1/_2$	4	56	16d Common	14	16d Common	9,710	9,710	9,710	4,345
THDH214-2	12	$3^3/_8$	$12^1/_4$	4	66	16d Common	16	16d Common	11,325	11,325	11,325	5,290
THDH3210	12	$3^3/_{16}$	$9^3/_8$	4	46	16d Common	12	16d Common	9,020	9,020	9,020	4,345
THDH3212	12	$3^3/_{16}$	$10^5/_8$	4	56	16d Common	14	16d Common	9,710	9,710	9,710	5,290
THDH46	12	$3^9/_{16}$	$5^3/_8$	4	20	16d Common	8	16d Common	4,375	4,895	5,180	2,805
THDH48	12	$3^9/_{16}$	$7^1/_8$	4	36	16d Common	10	16d Common	7,360	8,175	8,175	3,000
THDH410	12	$3^9/_{16}$	$9^1/_8$	4	46	16d Common	12	16d Common	9,020	9,020	9,020	4,345
THDH412	12	$3^9/_{16}$	$10^1/_2$	4	56	16d Common	14	16d Common	9,710	9,710	9,710	5,290
THDH414	12	$3^9/_{16}$	$13^1/_{16}$	4	66	16d Common	16	16d Common	11,325	11,325	11,325	5,305
THDH26-3	12	$5^1/_8$	$5^7/_{16}$	4	20	16d Common	8	16d Common	4,375	4,895	5,180	2,805
THDH28-3	12	$5^1/_8$	$7^3/_{16}$	4	36	16d Common	12	16d Common	7,595	8,175	8,175	4,345
THDH210-3	12	$5^1/_8$	$9^3/_{16}$	4	46	16d Common	16	16d Common	9,710	9,710	9,710	5,290
THDH212-3	12	$5^1/_8$	$11^3/_{16}$	4	56	16d Common	20	16d Common	9,530	9,530	9,530	5,290
THDH214-3	12	$5^1/_8$	$13^3/_{16}$	4	66	16d Common	22	16d Common	11,325	11,325	11,325	5,305
THDH5210	12	$5^3/_8$	$9^1/_8$	4	46	16d Common	16	16d Common	9,710	9,710	9,710	5,290
THDH5212	12	$5^3/_8$	$11^1/_8$	4	56	16d Common	20	16d Common	9,530	9,530	9,530	5,290
THDH5214	12	$5^3/_8$	$13^1/_8$	4	66	16d Common	22	16d Common	11,325	11,325	11,325	5,305
THDH610	12	$5^1/_2$	9	4	46	16d Common	16	16d Common	9,020	9,020	9,020	5,290
THDH612	12	$5^1/_2$	11	4	56	16d Common	20	16d Common	9,530	9,530	9,530	5,290
THDH614	12	$5^1/_2$	13	4	66	16d Common	22	16d Common	11,325	11,325	11,325	5,305
THDH26-4	12	$6^9/_{16}$	$5^7/_{16}$	4	20	16d Common	8	16d Common	4,375	4,895	5,180	2,805
THDH28-4	12	$6^7/_{16}$	$7^9/_{16}$	4	36	16d Common	12	16d Common	7,595	8,175	8,175	4,345
THDH6710	12	$6^7/_8$	$8^{13}/_{16}$	4	46	16d Common	12	16d Common	9,020	9,020	9,020	4,345
THDH6712	12	$6^7/_8$	$10^{13}/_{16}$	4	56	16d Common	14	16d Common	9,020	9,020	9,020	5,290
THDH6714	12	$6^7/_8$	$12^{13}/_{16}$	4	66	16d Common	16	16d Common	11,325	11,325	11,325	5,305
THDH7210	12	$7^1/_4$	9	4	46	16d Common	12	16d Common	9,020	9,020	9,020	4,345
THDH7212	12	$7^1/_4$	$10^1/_2$	4	56	16d Common	14	16d Common	9,020	9,020	9,020	5,290
THDH7214	12	$7^1/_4$	$12^1/_4$	4	66	16d Common	16	16d Common	11,325	11,325	11,325	5,305

For **SI:** 1 inch = 25.4 mm, 1 lbf = 4.45 N.

[1]Allowable loads have been adjusted for load duration factors, C_D, as shown, in accordance with the NDS. The allowable loads do not apply to loads of other durations, and are not permitted to be adjusted for other load durations. See Sections 4.1 and 4.2 for additional design and installation requirements.

[2]Allowable loads shown are for installations in wood members complying with Section 3.19.2. Wood members must also have a minimum reference compression perpendicular to grain design value, $F_{c\text{-}perp}$, of 625 psi (4.31 MPa).

[3]See Section 3.19.3 for required fastener dimensions and mechanical properties.

[4]THDH hangers provide torsional resistance, up to a maximum joist depth of H + 1.0 inch (H + 25.4 mm) where torsional resistance is defined as a moment not less than 75 pounds (334 N) times the depth of the joist, at which the lateral movement of the top or bottom of the joist with respect to the vertical position of the joist is 0.125 inch (3.2 mm).

[5]Joist nails must be driven horizontally into the joist at an angle of 30- to 45-degrees from normal, such that they penetrate through the joist, and into the header.

FIGURE 9—THDH FACE MOUNT HANGER

TABLE 10—THF FACE MOUNT HANGER ALLOWABLE LOADS[1,2,3,4]

STOCK NO.	STEEL GAGE	DIMENSIONS (in.)			FASTENER SCHEDULE[5]					ALLOWABLE LOADS (lbs)			
					Nail Conf.	Header		Joist		Download			Uplift
		W	H	D		Qty	Type	Qty	Type	C_D = 1.0	C_D = 1.15	C_D = 1.25	C_D = 1.60
THF15925	18	1 1/2	9 1/16	2	MIN	8	10d Common	2	10dx1 1/2	930	1,065	1,160	240
					MAX	12	10d Common	2	10dx1 1/2	1,390	1,600	1,700	240
THF15112	18	1 1/2	11 1/16	2	MIN	8	10d Common	2	10dx1 1/2	930	1,065	1,160	240
					MAX	16	10d Common	2	10dx1 1/2	1,855	2,135	2,165	240
THF15140	18	1 1/2	13 1/2	2	MIN	12	10d Common	2	10dx1 1/2	1,390	1,600	1,740	240
					MAX	20	10d Common	2	10dx1 1/2	2,105	2,140	2,165	240
THF16925	18	1 5/8	9	2	MIN	8	10d Common	2	10dx1 1/2	930	1,065	1,160	240
					MAX	12	10d Common	2	10dx1 1/2	1,390	1,600	1,700	240
THF16112	18	1 5/8	11	2	MIN	8	10d Common	2	10dx1 1/2	930	1,065	1,160	240
					MAX	16	10d Common	2	10dx1 1/2	1,855	2,135	2,320	240
THF16140	18	1 5/8	13 7/16	2	MIN	12	10d Common	2	10dx1 1/2	1,390	1,600	1,740	240
					MAX	20	10d Common	2	10dx1 1/2	2,265	2,300	2,320	240
THF17925	18	1 3/4	8 15/16	2	MIN	8	10d Common	2	10dx1 1/2	930	1,065	1,160	240
					MAX	12	10d Common	2	10dx1 1/2	1,390	1,600	1,700	240
THF17112	18	1 3/4	10 15/16	2	MIN	8	10d Common	2	10dx1 1/2	930	1,065	1,160	240
					MAX	16	10d Common	2	10dx1 1/2	1,855	2,135	2,320	240
THF17140	18	1 3/4	13 3/8	2	MIN	12	10d Common	2	10dx1 1/2	1,390	1,600	1,740	240
					MAX	20	10d Common	2	10dx1 1/2	2,320	2,455	2,480	240
THF20925	18	2 1/8	8 7/8	2	MIN	8	10d Common	2	10dx1 1/2	930	1,065	1,160	240
					MAX	12	10d Common	2	10dx1 1/2	1,390	1,600	1,700	240
THF20112	18	2 1/8	11 3/16	2	MIN	8	10d Common	2	10dx1 1/2	930	1,065	1,160	240
					MAX	16	10d Common	2	10dx1 1/2	1,855	2,135	2,320	240
THF20140	18	2 1/8	13 1/4	2	MIN	12	10d Common	2	10dx1 1/2	1,390	1,600	1,740	240
					MAX	20	10d Common	2	10dx1 1/2	2,320	2,670	2,790	240
THF15925-2	16	3 1/8	9 3/16	2 1/2	-	12	10d Common	6	10d Common	1,415	1,630	1,770	1,135
THF15112-2	16	3 1/8	10 13/16	2 1/2	-	14	10d Common	6	10d Common	1,650	1,900	2,065	1,135
THF15140-2	12	3 1/8	12 3/4	2 1/2	-	18	10d Common	6	10d Common	2,395	2,755	2,995	1,275
THF16925-2	16	3 3/8	9 1/16	2 1/2	-	12	10d Common	6	10d Common	1,415	1,630	1,770	1,135
THF16112-2	16	3 3/8	10 3/4	2 1/2	-	14	10d Common	6	10d Common	1,650	1,900	2,065	1,135
THF16140-2	12	3 3/8	12 5/8	2 1/2	-	18	10d Common	6	10d Common	2,395	2,755	2,995	1,275
THF17157	18	1 13/16	15 3/4	3 1/2	-	24	10d Common	2	10dx1 1/2	2,785	3,200	3,480	240
THF20157	18	2 1/8	15 3/4	3 3/8	-	24	10d Common	2	10dx1 1/2	2,785	3,200	3,480	240
THF17157-2	12	3 5/8	15 3/4	2 1/2	-	22	10d Common	6	10d Common	2,925	3,365	3,660	1,275
THF20925-2	16	4 3/16	8 11/16	2 1/2	-	12	10d Common	6	10d Common	1,415	1,630	1,770	1,135
THF20112-2	16	4 3/16	11	2 1/2	-	16	10d Common	6	10d Common	1,890	2,170	2,360	1,135
THF20140-2	16	4 3/16	13 5/8	2 1/2	-	20	10d Common	6	10d Common	2,360	2,715	2,950	1,135
THF23925	18	2 5/16	9 3/16	2 1/2	-	12	10d Common	2	10dx1 1/2	1,390	1,600	1,740	165
THF23100	18	2 5/16	9 3/16	2 1/2	-	12	10d Common	2	10dx1 1/2	1,390	1,600	1,740	330
THF23118	18	2 5/16	11 3/16	2 1/2	-	14	10d Common	2	10dx1 1/2	1,625	1,870	2,030	330
THF23140	16	2 5/16	13 1/2	2 1/2	-	18	10d Common	2	10dx1 1/2	2,125	2,445	2,655	330
THF23160	16	2 5/16	15 9/16	2 1/2	-	22	10d Common	2	10dx1 1/2	2,595	2,970	2,970	330
THF23180	16	2 5/16	17 1/8	2 1/2	-	24	10d Common	8	10dx1 1/2	2,830	3,255	3,540	1,285
THF23925-2	16	4 3/4	8 3/8	2 1/2	-	12	10d Common	6	10d Common	1,415	1,630	1,770	1,135
THF23118-2	16	4 3/4	10 11/16	2 1/2	-	16	10d Common	6	10d Common	1,890	2,170	2,360	1,135
THF23140-2	12	4 3/4	13 5/16	2 1/2	-	20	10d Common	6	10d Common	2,660	3,060	3,325	1,275
THF23160-2	12	4 3/4	15 15/16	2 1/2	-	24	10d Common	6	10d Common	3,190	3,670	3,990	1,275
THF25925	18	2 1/2	9 1/8	2 1/2	-	12	10d Common	2	10dx1 1/2	1,390	1,600	1,740	165
THF25112	18	2 1/2	11 1/8	2 1/2	-	14	10d Common	2	10dx1 1/2	1,625	1,870	2,030	330
THF25120	18	2 1/2	11 1/8	2 1/2	-	14	10d Common	2	10dx1 1/2	1,625	1,870	2,030	330
THF25130	16	2 1/2	12 1/4	2 1/2	-	18	10d Common	2	10dx1 1/2	2,125	2,445	2,655	330
THF25140	16	2 1/2	13 7/16	2 1/2	-	18	10d Common	2	10dx1 1/2	2,125	2,445	2,655	330
THF25160	16	2 1/2	15 1/2	2 1/2	-	22	10d Common	2	10dx1 1/2	2,595	2,970	2,970	330
THF25925-2	16	5 1/8	8 3/16	2 1/2	-	12	10d Common	6	10d Common	1,415	1,630	1,770	1,135
THF25112-2	16	5 1/8	10 7/16	2 1/2	-	16	10d Common	6	10d Common	1,890	2170	2,360	1,135

ICC-ES® Most Widely Accepted and Trusted

TABLE 10—THF FACE MOUNT HANGER ALLOWABLE LOADS[1,2,3,4]

STOCK NO.	STEEL GAGE	DIMENSIONS (in.)			FASTENER SCHEDULE[5]					ALLOWABLE LOADS (lbs)			
					Nail Conf.	Header		Joist		Download			Uplift
		W	H	D		Qty	Type	Qty	Type	C_D = 1.0	C_D = 1.15	C_D = 1.25	C_D = 1.60
THF25140-2	12	$5^1/_8$	$13^1/_8$	$2^1/_2$	-	20	10d Common	6	10d Common	2,660	3,060	3,325	1,275
THF25160-2	12	$5^1/_8$	$15^3/_4$	$2^1/_2$	-	24	10d Common	6	10d Common	3,190	3,670	3,990	1,275
THF26925	18	$2^5/_8$	$9^1/_{16}$	$2^1/_2$	-	12	10d Common	2	10dx$1^1/_2$	1,390	1,600	1,740	165
THF26112	18	$2^5/_8$	$11^1/_{16}$	$2^1/_2$	-	14	10d Common	2	10dx$1^1/_2$	1,625	1,870	2,030	330
THF26140	16	$2^5/_8$	$13^3/_8$	$2^1/_2$	-	18	10d Common	2	10dx$1^1/_2$	2,125	2,445	2,655	330
THF26160	16	$2^5/_8$	$15^7/_{16}$	$2^1/_2$	-	22	10d Common	2	10dx$1^1/_2$	2,595	2,970	2,970	330
THF35925	18	$3^1/_2$	$8^5/_8$	$2^1/_2$	-	12	10d Common	2	10dx$1^1/_2$	1,390	1,600	1,740	230
THF35112	18	$3^1/_2$	$10^5/_8$	$2^1/_2$	-	16	10d Common	2	10dx$1^1/_2$	1,855	2,135	2,320	230
THF35140	16	$3^1/_2$	$12^{15}/_{16}$	$2^1/_2$	-	20	10d Common	2	10dx$1^1/_2$	2,360	2,715	2,950	230
THF35157	16	$3^1/_2$	15	$2^1/_2$	-	22	10d Common	2	10dx$1^1/_2$	2,595	2,985	3,245	230
THF35165	16	$3^1/_2$	$16^9/_{16}$	$2^1/_2$	-	24	10d Common	8	10dx$1^1/_2$	2,830	3,255	3,540	1,285

For **SI:** 1 inch = 25.4 mm, 1 lbf = 4.45 N, 1 psi = 6.895 kPa.

[1]Allowable loads have been adjusted for load duration factors, C_D, as shown, in accordance with the NDS. The allowable loads do not apply to loads of other durations, and are not permitted to be adjusted for other load durations. See Sections 4.1 and 4.2 for additional design and installations requirements.
[2]See Section 3.19.3 for required fastener dimensions and mechanical properties.
[3]Allowable loads shown are for installations in wood members complying with Section 3.19.2. Wood members must also have a minimum reference compression perpendicular to grain design value, $F_{c\text{-}perp}$, of 625 psi (4.31 MPa).
[4]For minimum (MIN) nailing configuration, all round nail holes must be filled with nails. For maximum (MAX) nailing configuration, all round and diamond holes must be filled with nails. The joist hangers are not intended for use with intermediate numbers of fasteners.
[5]Reinforce supported and supporting I-joists as required per manufacturer's instructions.

FIGURE 10—THF FACE MOUNT HANGER

TABLE 11—THFI FACE MOUNT HANGER ALLOWABLE LOADS [1,2,3,4]

STOCK NO.	STEEL GAGE	HANGER DIMENSIONS (in.)			MIN/ MAX	FASTENING SCHEDULE				ALLOWABLE LOADS (lbs)			
						Header[6]		Joist [5]		Download			Uplift
		W	H	D		Qty	Type	Qty	Type	C_D = 1.0	C_D = 1.15	C_D = 1.25	C_D = 1.6
THFI1795	18	1 7/8	9 1/2	2	-	8	10d Common	-	-	960	1,095	1,180	125
THFI17118	18	1 7/8	11 7/8	2	-	10	10d Common	-	-	1,200	1,265	1,265	125
THFI1714	18	1 7/8	14	2	Min	12	10d Common	-	-	1,440	1,640	1,770	125
THFI1714	18	1 7/8	14	2	Max	14	10d Common	-	-	1,680	1,915	2,065	125
THFI1716	18	1 7/8	16	2	Min	14	10d Common	-	-	1,680	1,915	2,065	125
THFI1716	18	1 7/8	16	2	Max	16	10d Common	-	-	1,920	2,190	2,190	125
THFI2095	18	2 1/8	9 1/2	2	-	8	10d Common	-	-	960	1,095	1,180	125
THFI20118	18	2 1/8	11 7/8	2	-	10	10d Common	-	-	1,200	1,265	1,265	125
THFI2014	18	2 1/8	14	2	Min	12	10d Common	-	-	1,440	1,640	1,770	125
THFI2014	18	2 1/8	14	2	Max	14	10d Common	-	-	1,680	1,915	2,065	125
THFI2016	18	2 1/8	16	2	Min	14	10d Common	-	-	1,680	1,915	2,065	125
THFI2016	18	2 1/8	16	2	Max	16	10d Common	-	-	1,920	2,190	2,265	125
THFI2395	18	2 3/8	9 1/2	2	-	8	10d Common	-	-	960	1,095	1,180	125
THFI23118	18	2 3/8	11 7/8	2	-	10	10d Common	-	-	1,200	1,265	1,265	125
THFI2314	18	2 3/8	14	2	Min	12	10d Common	-	-	1,440	1,640	1,770	125
THFI2314	18	2 3/8	14	2	Max	14	10d Common	-	-	1,680	1,915	2,065	125
THFI2316	18	2 3/8	16	2	Min	14	10d Common	-	-	1,680	1,915	2,065	125
THFI2316	18	2 3/8	16	2	Max	16	10d Common	-	-	1,920	2,190	2,265	125
THFI25925	18	2 5/8	9 1/4	2	-	8	10d Common	-	-	960	1,095	1,180	125
THFI2595	18	2 5/8	9 1/2	2	-	8	10d Common	-	-	960	1,095	1,180	125
THFI25118	18	2 5/8	11 7/8	2	-	10	10d Common	-	-	1,200	1,265	1,265	125
THFI2514	18	2 5/8	14	2	Min	12	10d Common	-	-	1,440	1,640	1,770	125
THFI2514	18	2 5/8	14	2	Max	14	10d Common	-	-	1,680	1,915	2,065	125
THFI2516	18	2 5/8	16	2	Min	14	10d Common	-	-	1,680	1,915	2,065	125
THFI2516	18	2 5/8	16	2	Max	16	10d Common	-	-	1,920	2,190	2,265	125
THFI3595	18	3 5/8	9 1/2	2	-	10	10d Common	-	-	1,200	1,265	1,265	125
THFI35118	18	3 5/8	11 7/8	2	-	12	10d Common	-	-	1,440	1,640	1,770	125
THFI3514	18	3 5/8	14	2	Min	12	10d Common	-	-	1,440	1,640	1,770	125
THFI3514	18	3 5/8	14	2	Max	14	10d Common	-	-	1,680	1,915	2,065	125
THFI3516	18	3 5/8	16	2	Min	14	10d Common	-	-	1,680	1,915	2,065	125
THFI3516	18	3 5/8	16	2	Max	16	10d Common	-	-	1,920	2,190	2,265	125

For **SI:** 1 inch = 25.4 mm, 1 lbf = 4.45 N, 1 psi = 6.895 kPa.

[1]Allowable loads have been adjusted for load duration factors, C_D, as shown, in accordance with the NDS. The allowable loads do not apply to loads of other durations, and are not permitted to be adjusted for other load durations. See Sections 4.1 and 4.2 for additional design and installations requirements.
[2]See Section 3.19.3 for required fastener dimensions and mechanical properties.
[3]Allowable loads shown are for installations in wood members complying with Section 3.19.2. Wood members must also have a minimum reference compression perpendicular to grain design value, $F_{c\text{-perp}}$, of 625 psi (4.31 MPa).
[4]For minimum (Min) nailing configuration, all round nail holes must be filled with nails. For maximum (Max) nailing configuration, all round and diamond holes must be filled with nails. The joist hangers are not intended for use with intermediate numbers of fasteners.
[5]Joists are held in hangers using seat cleats.
[6]Reinforce supporting I-joist headers as required per manufacturer's instructions.

FIGURE 11—THFI FACE MOUNT HANGER

TABLE 12—LGU / MGU / HGU GIRDER HANGER ALLOWABLE LOADS

STOCK NO.	STEEL GAGE		DIMENSIONS (in.)			FASTENER SCHEDULE				ALLOWABLE LOADS[2,4] (lbs)			
						Header		Joist		Download			Uplift
		W	H[1]	H_1	D	Qty	Type[3]	Qty	Type	C_D = 1.0	C_D = 1.15	C_D = 1.25	C_D = 1.6
LGU325	10	3 1/4	Specify	7 3/8	4 1/2	18	WS3	12	WS3	7,135	7,410	7,410	3,975
LGU363	10	3 5/8	Specify	7 3/8	4 1/2	18	WS3	12	WS3	7,135	7,410	7,410	3,975
LGU525	10	5 1/4	Specify	7 3/8	4 1/2	18	WS3	12	WS3	7,135	7,410	7,410	3,975
MGU363	10	3 5/8	Specify	8 5/8	4 1/2	24	WS3	16	WS3	9,515	10,940	11,890	5,060
MGU525	10	5 1/4	Specify	8 5/8	4 1/2	24	WS3	16	WS3	9,515	10,940	11,890	5,060
MGU550	10	5 1/2	Specify	8 5/8	4 1/2	24	WS3	16	WS3	9,515	10,940	11,890	5,060
MGU562	10	5 5/8	Specify	8 5/8	4 1/2	24	WS3	16	WS3	9,515	10,940	11,890	5,060
MGU700	10	7	Specify	8 5/8	4 1/2	24	WS3	16	WS3	9,515	10,940	11,890	5,060
HGU363	7	3 5/8	Specify	10 3/8	5 1/4	38	WS3	24	WS3	14,705	14,990	14,990	7,375
HGU525	7	5 1/4	Specify	10 3/8	5 1/4	38	WS3	24	WS3	14,705	14,990	14,990	7,375
HGU550	7	5 1/2	Specify	10 3/8	5 1/4	38	WS3	24	WS3	14,705	14,990	14,990	7,375
HGU562	7	5 5/8	Specify	10 3/8	5 1/4	38	WS3	24	WS3	14,705	14,990	14,990	7,375
HGU700	7	7	Specify	10 3/8	5 1/4	38	WS3	24	WS3	14,705	14,990	14,990	7,375
HGU725	7	7 1/4	Specify	10 3/8	5 1/4	38	WS3	24	WS3	14,705	14,990	14,990	7,375
HGU900	7	9	Specify	10 3/8	5 1/4	38	WS3	24	WS3	14,705	14,990	14,990	7,375

For **SI:** 1 inch = 25.4 mm, 1 lbf = 4.45 N, 1 psi = 6.895 kPa.

[1]The minimum supported member heights, H, for the LGU, MGU, and HGU are 8", 9 1/4", and 11", respectively.
[2]Allowable loads have been adjusted for load duration factors, C_D, as shown, in accordance with the NDS. The allowable loads do not apply to loads of other durations, and are not permitted to be adjusted for other load durations. See Sections 4.1 and 4.2 for additional design and installations requirements.
[3]The WS3 is a ¼" x 3" self-drilling screw described in ESR-2761 and are included with the hangers.
[4]Allowable loads shown are for installations in wood members complying with Section 3.19.2. Wood members must also have a minimum reference compression perpendicular to grain design value, $F_{c\text{-perp}}$, of 625 psi (4.31 MPa).

FIGURE 12—LGU / MGU / HGU GIRDER HANGER

TABLE 13—THDHQ GIRDER TRUSS HANGER ALLOWABLE LOADS[1,2,3]

STOCK NO.	STEEL GAGE	DIMENSIONS (in.)			FASTENER SCHEDULE				ALLOWABLE LOADS (lbs)			
		W	H	D	Header		Joist		Download			Uplift
					Qty	Type	Qty	Type	C_D = 1.0	C_D = 1.15	C_D = 1.25	C_D = 1.6
THDHQ26-2	12	$3^{5}/_{16}$	$5^{7}/_{16}$	4	12	WS3	4	WS3	5,015	5,745	5,745	2,055
THDHQ26-3	12	$4^{15}/_{16}$	$5^{7}/_{16}$	4	12	WS3	4	WS3	5,015	5,745	5,745	2,055
THDHQ26-4	12	$6^{9}/_{16}$	$5^{7}/_{16}$	4	12	WS45	4	WS6	5,015	5,745	5,745	2,490
THDHQ28-2	12	$3^{5}/_{16}$	$7^{3}/_{16}$	4	20	WS3	8	WS3	8,355	9,540	9,540	3,645
THDHQ28-3	12	$4^{15}/_{16}$	$7^{3}/_{16}$	4	20	WS3	8	WS3	8,355	9,540	9,540	3,645
THDHQ28-4	12	$6^{9}/_{16}$	$7^{3}/_{16}$	4	20	WS45	8	WS6	8,355	9,540	9,540	4,530
THDHQ210-2	12	$3^{5}/_{16}$	$9^{3}/_{16}$	4	28	WS3	8	WS3	10,840	10,880	10,880	5,270
THDHQ210-3	12	$4^{15}/_{16}$	$9^{3}/_{16}$	4	28	WS3	8	WS3	10,880	10,880	10,880	5,270
THDHQ210-4	12	$6^{9}/_{16}$	$9^{3}/_{16}$	4	28	WS45	8	WS6	10,880	10,880	10,880	4,200
THDHQ46	12	$3^{5}/_{8}$	$5^{7}/_{16}$	4	12	WS3	8	WS3	5,015	5,745	5,745	2,055
THDHQ48	12	$3^{5}/_{8}$	$7^{3}/_{16}$	4	20	WS3	8	WS3	8,355	9,540	9,540	3,645
THDHQ410	12	$3^{5}/_{8}$	$9^{3}/_{16}$	4	28	WS3	8	WS3	10,880	10,880	10,880	5,270

For **SI:** 1 inch = 25.4 mm, 1 lbf = 4.45 N, 1 psi = 6.895 kPa.

[1]Allowable loads have been adjusted for load duration factors, C_D, as shown, in accordance with the NDS. The allowable loads do not apply to loads of other durations, and are not permitted to be adjusted for other load durations. See Sections 4.1 and 4.2 for additional design and installations requirements.
[2]Wood screws (WS) used for THDHQ hangers are described in ESR-2761 and are included with the hangers.
[3]Allowable loads shown are for installations in wood members complying with Section 3.19.2. Wood members must also have a minimum reference compression perpendicular to grain design value, $F_{c\text{-}perp,}$ of 625 psi (4.31 MPa).

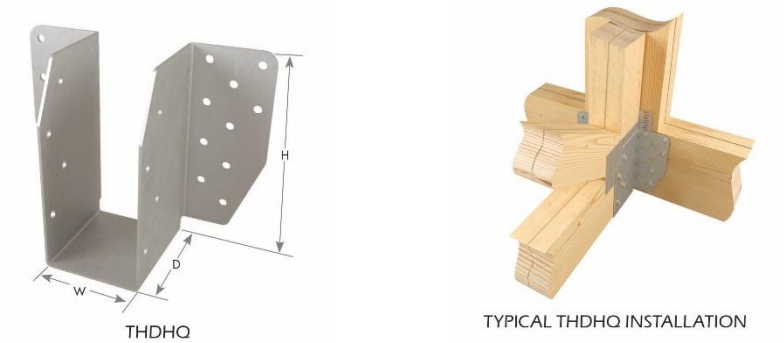

FIGURE 13—THDHQ GIRDER TRUSS HANGER

TABLE 14—IHF JOIST HANGER ALLOWABLE LOADS[1,2,3,4,5,6]

STOCK NO.	STEEL GAGE	DIMENSIONS (inches)			FASTENER SCHEDULE					ALLOWABLE LOADS (lbs.)			
		W	H	D	Nailing Configu-ration	Header		Joist		$F_{C\text{-}PERP}$ = 750 psi			Uplift
						Qty	Type	Qty	Type	C_D =1.0	C_D =1.15	C_D =1.25	C_D =1.6
IHF15925	16	1 1/2	9 1/16	2 1/2	MIN	8	10d Common	2	10d x 1 1/2	1,000	1,120	1,210	330
					MAX	20	16d Common	2	10d x 1 1/2	2,905	2,905	2,905	330
IHF15112	16	1 1/2	11 1/16	2 1/2	MIN	10	10d Common	2	10d x 1 1/2	1,250	1,405	1,515	330
					MAX	24	16d Common	2	10d x 1 1/2	3,065	3,095	3,115	330
IHF1514	16	1 1/2	13 1/2	2 1/2	MIN	12	10d Common	2	10d x 1 1/2	1,500	1,685	1,815	330
					MAX	28	16d Common	2	10d x 1 1/2	3,065	3,095	3,115	330
IHF16925	16	1 5/8	9	2 1/2	MIN	8	10d Common	2	10d x 1 1/2	1,000	1,120	1,210	330
					MAX	20	16d Common	2	10d x 1 1/2	2,905	2,905	2,905	330
IHF16112	16	1 5/8	11	2 1/2	MIN	10	10d Common	2	10d x 1 1/2	1,250	1,405	1,515	330
					MAX	24	16d Common	2	10d x 1 1/2	3,295	3,325	3,350	330
IHF1614	16	1 5/8	13 7/16	2 1/2	MIN	12	10d Common	2	10d x 1 1/2	1,500	1,685	1,815	330
					MAX	28	16d Common	2	10d x 1 1/2	3,295	3,325	3,350	330
IHF17925	16	1 3/4	8 15/16	2 1/2	MIN	8	10d Common	2	10d x 1 1/2	1,000	1,120	1,210	330
					MAX	20	16d Common	2	10d x 1 1/2	2,905	2,905	2,905	330
IHF17112	16	1 3/4	10 15/16	2 1/2	MIN	10	10d Common	2	10d x 1 1/2	1,250	1,405	1,515	330
					MAX	24	16d Common	2	10d x 1 1/2	3,530	3,560	3,585	330
IHF1714	16	1 3/4	13 3/8	2 1/2	MIN	12	10d Common	2	10d x 1 1/2	1,500	1,685	1,815	330
					MAX	28	16d Common	2	10d x 1 1/2	3,530	3,560	3,585	330
IHF1716	16	1 13/16	15 3/4	2 1/2	MIN	14	10d Common	2	10d x 1 1/2	1,750	1,965	2,120	330
					MAX	30	16d Common	2	10d x 1 1/2	3,530	3,560	3,585	330
IHF20925	16	2 1/8	8 7/8	2 1/2	MIN	8	10d Common	2	10d x 1 1/2	1,000	1,120	1,210	330
					MAX	20	16d Common	2	10d x 1 1/2	2,905	2,905	2,905	330
IHF20112	16	2 1/8	11 3/16	2 1/2	MIN	10	10d Common	2	10d x 1 1/2	1,250	1,405	1,515	330
					MAX	24	16d Common	2	10d x 1 1/2	3,530	3,960	3,960	330
IHF2014	16	2 1/8	13 1/4	2 1/2	MIN	12	10d Common	2	10d x 1 1/2	1,500	1,685	1,815	330
					MAX	28	16d Common	2	10d x 1 1/2	4,115	4,150	4,170	330
IHF23925	16	2 5/16	9 3/16	2 1/2	MIN	10	10d Common	2	10d x 1 1/2	1,250	1,375	1,375	330
					MAX	24	16d Common	2	10d x 1 1/2	3,530	4,000	4,320	330
IHF23112	16	2 5/16	11 3/16	2 1/2	MIN	10	10d Common	2	10d x 1 1/2	1,250	1,405	1,515	330
					MAX	24	16d Common	2	10d x 1 1/2	3,530	3,960	3,960	330
IHF2314	16	2 5/16	13 1/2	2 1/2	MIN	12	10d Common	2	10d x 1 1/2	1,500	1,685	1,815	330
					MAX	28	16d Common	2	10d x 1 1/2	4,115	4,440	4,440	330
IHF2316	16	2 5/16	15 9/16	2 1/2	MIN	14	10d Common	2	10d x 1 1/2	1,750	1,965	2,120	330
					MAX	30	16d Common	2	10d x 1 1/2	4,410	4,440	4,440	330
IHF2318	16	2 5/16	17 1/8	2 1/2	MIN	14	10d Common	2	10d x 1 1/2	1,750	1,965	2,120	330
					MAX	30	16d Common	2	10d x 1 1/2	4,410	4,440	4,440	330
IHF25925	16	2 1/2	9 1/8	2 1/2	MIN	10	10d Common	2	10d x 1 1/2	1,250	1,375	1,375	330
					MAX	24	16d Common	2	10d x 1 1/2	3,530	4,000	4,320	330
IHF25112	16	2 1/2	11 1/8	2 1/2	MIN	10	10d Common	2	10d x 1 1/2	1,250	1,375	1,375	330
					MAX	24	16d Common	2	10d x 1 1/2	3,530	3,960	3,960	330
IHF2514	16	2 1/2	13 7/16	2 1/2	MIN	12	10d Common	2	10d x 1 1/2	1,500	1,685	1,815	330
					MAX	28	16d Common	2	10d x 1 1/2	4,115	4,440	4,440	330
IHF2516	16	2 1/2	15 1/2	2 1/2	MIN	14	10d Common	2	10d x 1 1/2	1,750	1,965	2,120	330
					MAX	30	16d Common	2	10d x 1 1/2	4,410	4,440	4,440	330
IHF26925	16	2 5/8	9 1/16	2 1/2	MIN	10	10d Common	2	10d x 1 1/2	1,250	1,375	1,375	330
					MAX	24	16d Common	2	10d x 1 1/2	3,530	4,000	4,320	330
IHF26112	16	2 5/8	11 1/16	2 1/2	MIN	10	10d Common	2	10d x 1 1/2	1,250	1,375	1,375	330
					MAX	24	16d Common	2	10d x 1 1/2	3,530	3,960	3,960	330
IHF2614	16	2 5/8	13 3/8	2 1/2	MIN	12	10d Common	2	10d x 1 1/2	1,500	1,685	1,815	330
					MAX	28	16d Common	2	10d x 1 1/2	4,115	4,440	4,440	330
IHF2616	16	2 5/8	15 7/16	2 1/2	MIN	14	10d Common	2	10d x 1 1/2	1,750	1,965	2,120	330
					MAX	30	16d Common	2	10d x 1 1/2	4,410	4,440	4,440	330

TABLE 14—IHF JOIST HANGER ALLOWABLE LOADS[1,2,3,4,5,6] (Continued)

STOCK NO.	STEEL GAGE	DIMENSIONS (inches)			FASTENER SCHEDULE					ALLOWABLE LOADS (lbs.)			
		W	H	D	Nailing Configu-ration	Header		Joist		$F_{C\text{-}PERP}$ = 750 psi			Uplift
						Qty	Type	Qty	Type	C_D =1.0	C_D =1.15	C_D =1.25	C_D =1.6
IHF15925-2	16	$3^1/_8$	$9^3/_{16}$	$2^1/_2$	MIN	10	10d Common	2	10d Common	1,250	1,375	1,375	330
					MAX	24	16d Common	2	10d Common	3,530	4,000	4,320	330
IHF15112-2	16	$3^1/_8$	$10^{13}/_{16}$	$2^1/_2$	MIN	10	10d Common	2	10d Common	1250	1,375	1,375	330
					MAX	24	16d Common	2	10d Common	3,530	3,960	3,960	330
IHF16925-2	16	$3^3/_8$	$9^1/_{16}$	$2^1/_2$	MIN	10	10d Common	2	10d Common	1,250	1,375	1,375	330
					MAX	24	16d Common	2	10d Common	3,530	4,000	4,320	330
IHF16112-2	16	$3^3/_8$	$10^3/_4$	$2^1/_2$	MIN	10	10d Common	2	10d Common	1,250	1,375	1,375	330
					MAX	24	16d Common	2	10d Common	3,530	3,960	3,960	330
IHF35925	16	$3^1/_2$	$8^5/_8$	$2^1/_2$	MIN	10	10d Common	2	10d x $1^1/_2$	1,250	1,375	1,375	330
					MAX	24	16d Common	2	10d x $1^1/_2$	3,530	4,000	4,320	330
IHF35112	16	$3^1/_2$	$10^5/_8$	$2^1/_2$	MIN	10	10d Common	2	10d x $1^1/_2$	1,250	1,375	1,375	330
					MAX	24	16d Common	2	10d x $1^1/_2$	3,530	3,960	3,960	330
IHF3514	16	$3^1/_2$	$12^{15}/_{16}$	$2^1/_2$	MIN	12	10d Common	2	10d x $1^1/_2$	1,500	1,685	1,815	330
					MAX	28	16d Common	2	10d x $1^1/_2$	4,115	4,440	4,440	330
IHF3516	16	$3^1/_2$	15	$2^1/_2$	MIN	14	10d Common	2	10d x $1^1/_2$	1,750	1,965	2,120	330
					MAX	30	16d Common	2	10d x $1^1/_2$	4,410	4,440	4,440	330
IHF3518	16	$3^1/_2$	$16^9/_{16}$	$2^1/_2$	MIN	14	10d Common	2	10d x $1^1/_2$	1,750	1,965	2,120	330
					MAX	30	16d Common	2	10d x $1^1/_2$	4,410	4,440	4,440	330
IHF20925-2	16	$4^3/_{16}$	$8^{11}/_{16}$	$2^1/_2$	MIN	10	10d Common	2	10d Common	1,250	1,405	1,515	330
					MAX	24	16d Common	2	10d Common	3,530	3,960	3,960	330
IHF20112-2	16	$4^3/_{16}$	11	$2^1/_2$	MIN	10	10d Common	2	10d Common	1,250	1,405	1,515	330
					MAX	24	16d Common	2	10d Common	3,530	3,960	3,960	330
IHF2014-2	16	$4^3/_{16}$	$13^5/_8$	$2^1/_2$	MIN	12	10d Common	2	10d Common	1,500	1,685	1,815	330
					MAX	28	16d Common	2	10d Common	3,960	3,960	3,960	330
IHF23925-2	16	$4^3/_4$	$8^3/_8$	$2^1/_2$	MIN	10	10d Common	2	10d Common	1,250	1,405	1,515	330
					MAX	24	16d Common	2	10d Common	3,530	3,960	3,960	330
IHF25925-2	16	$5^1/_8$	$8^3/_{16}$	$2^1/_2$	MIN	10	10d Common	2	10d Common	1,250	1,405	1,515	330
					MAX	24	16d Common	2	10d Common	3,530	3,960	3,960	330
IHF25112-2	16	$5^1/_8$	$10^7/_{16}$	$2^1/_2$	MIN	10	10d Common	2	10d Common	1,250	1,405	1,515	330
					MAX	24	16d Common	2	10d Common	3,530	3,960	3,960	330

For **SI:** 1 inch = 25.4 mm, 1 lbf = 4.45 N, 1 psi =6.895 kPa.

[1]Allowable loads have been adjusted for load duration factors, C_D, as shown, in accordance with the NDS. The allowable loads do not apply to loads of other durations, and are not permitted to be adjusted for other load durations. See Sections 4.1 and 4.2 for additional design and installation requirements.
[2]See Section 3.19.3 for required fastener dimensions and mechanical properties.
[3]Allowable loads shown are for installations in wood members complying with Section 3.19.2. Wood I-joist flanges must have a minimum reference compression perpendicular to grain design value, $F_{c\text{-}perp}$, of 750 psi (5.17 MPa).
[4]Fill all round header nail holes for MIN nailing; and all round and diamond nail holes for MAX nailing. The joist hangers are not intended for use with intermediate numbers of fasteners.
[5]Diamond joist nail holes must be filled to achieve the tabulated uplift. With no joist nails installed, allowable uplift of 65 lbs is provided by Seat Cleat® engagement with I-joist flange.
[6]Web stiffeners are not required unless specified by the wood I-joist manufacturer.

FIGURE 14—IHF FACE MOUNT HANGER

TABLE 15—IHFL JOIST HANGER ALLOWABLE LOADS[1,2,3,4,5]

STOCK NO.	STEEL GAGE	DIMENSIONS (inches)			FASTENER SCHEDULE				ALLOWABLE LOADS (lbs.)			ALLOWABLE LOADS (lbs.)			
		W	H	D	Nailing Configu-ration	Header Qty	Header Type	Joist	$F_{C\text{-}PERP}$ = 625 psi			$F_{C\text{-}PERP}$ = 750 psi			Uplift [6]
									C_D =1.0	C_D =1.15	C_D =1.25	C_D =1.0	C_D =1.15	C_D =1.25	C_D =1.6
IHFL15925	18	1 1/2	9 1/16	2 1/2	--	8	10d Common	--	960	1,095	1,180	960	1,095	1,180	50
IHFL15112	18	1 1/2	11 1/16	2 1/2	--	10	10d Common	--	1,200	1,370	1,475	1,200	1,370	1,475	50
IHFL17925	18	1 3/4	8 15/16	2 1/2	--	8	10d Common	--	960	1,095	1,180	960	1,095	1,180	50
IHFL17112	18	1 3/4	10 15/16	2 1/2	--	10	10d Common	--	1,200	1,370	1,475	1,200	1,370	1,475	50
IHFL1714	18	1 3/4	13 3/8	2 1/2	MIN	12	10d Common	--	1,440	1,640	1,770	1,440	1,640	1,770	50
					MAX	14	10d Common	--	1,680	1,915	2,065	1,680	1,915	2,065	50
IHFL1716	18	1 3/4	15 7/8	2 1/2	MIN	14	10d Common	--	1,680	1,915	2,065	1,680	1,915	2,065	50
					MAX	16	10d Common	--	1,920	2,190	2,360	1,920	2,190	2,360	50
IHFL20925	18	2 1/16	8 3/4	2 1/2	--	8	10d Common	--	960	1,095	1,180	960	1,095	1,180	50
IHFL20112	18	2 1/16	11 5/16	2 1/2	--	10	10d Common	--	1,200	1,370	1,475	1,200	1,370	1,475	50
IHFL2014	18	2 1/16	13 3/16	2 1/2	MIN	12	10d Common	--	1,440	1,640	1,770	1,440	1,640	1,770	50
					MAX	14	10d Common	--	1,680	1,915	2,065	1,680	1,915	2,065	50
IHFL2016	18	2 1/16	15 11/16	2 1/2	MIN	14	10d Common	--	1,680	1,915	2,065	1,680	1,915	2,065	50
					MAX	16	10d Common	--	1,920	2,190	2,360	1,920	2,190	2,360	50
IHFL23925	18	2 5/16	9 3/16	2 1/2	--	8	10d Common	--	960	1,095	1,180	960	1,095	1,180	50
IHFL23112	18	2 5/16	11 3/16	2 1/2	--	10	10d Common	--	1,200	1,370	1,475	1,200	1,370	1,475	50
IHFL2314	18	2 5/16	13 1/2	2 1/2	MIN	12	10d Common	--	1,440	1,640	1,770	1,440	1,640	1,770	50
					MAX	14	10d Common	--	1,680	1,915	2,065	1,680	1,915	2,065	50
IHFL2316	18	2 5/16	15 9/16	2 1/2	MIN	14	10d Common	--	1,680	1,915	2,065	1,680	1,915	2,065	50
					MAX	16	10d Common	--	1,920	2,190	2,360	1,920	2,190	2,360	50
IHFL25925	18	2 1/2	9 1/8	2 1/2	--	8	10d Common	--	960	1,095	1,180	960	1,095	1,180	50
IHFL25112	18	2 1/2	11 1/8	2 1/2	--	10	10d Common	--	1,200	1,370	1,475	1,200	1,370	1,475	50
IHFL2514	18	2 1/2	13 7/16	2 1/2	MIN	12	10d Common	--	1,440	1,640	1,770	1,440	1,640	1,770	50
					MAX	14	10d Common	--	1,680	1,915	2,065	1,680	1,915	2,065	50
IHFL2516	18	2 1/2	15 1/2	2 1/2	MIN	14	10d Common	--	1,680	1,915	2,065	1,680	1,915	2,065	50
					MAX	16	10d Common	--	1,920	2,190	2,360	1,920	2,190	2,360	50
IHFL35925	18	3 1/2	8 5/8	2 1/2	--	10	10d Common	--	1,200	1,370	1,475	1,200	1,370	1,475	50
IHFL35112	18	3 1/2	10 5/8	2 1/2	MIN	10	10d Common	--	1,200	1,370	1,475	1,200	1,370	1,475	50
					MAX	12	10d Common	--	1,440	1,640	1,770	1,440	1,640	1,770	50
IHFL3514	18	3 1/2	12 15/16	2 1/2	MIN	12	10d Common	--	1,440	1,640	1,770	1,440	1,640	1,770	50
					MAX	14	10d Common	--	1,680	1,915	2,065	1,680	1,915	2,065	50
IHFL3516	18	3 1/2	15	2 1/2	MIN	14	10d Common	--	1,680	1,915	2,065	1,680	1,915	2,065	50
					MAX	16	10d Common	--	1,920	2,190	2,360	1,920	2,190	2,360	50

For **SI:** 1 inch = 25.4 mm, 1 lbf = 4.45 N, 1 psi =6.895 kPa.

[1]Allowable loads have been adjusted for load duration factors, C_D, as shown, in accordance with the NDS. The allowable loads do not apply to loads of other durations, and are not permitted to be adjusted for other load durations. See Sections 4.1 and 4.2 for additional design and installation requirements.
[2]See Section 3.19.3 for required fastener dimensions and mechanical properties.
[3]Allowable loads shown are for installations in wood members complying with Section 3.19.2. Wood members must also have a minimum reference compression perpendicular to grain as shown above for utilization of the associated design value.
[4]Fill all round header nail holes for MIN nailing; and all round and diamond header nail holes for MAX nailing. The joist hangers are not intended for use with intermediate numbers of fasteners.
[5]Web stiffeners are not required unless specified by the I-joist manufacturer.
[6]Uplift resistance provided by Seat Cleat® engagement with I-joist flange. For additional uplift capacity, install (2) 10d x 1-1/2" nails through diamond holes in the bucket and into the joist member. Under these installation conditions, the allowable uplift load is 220 lbs (160%).

IHFL TYPICAL IHFL INSTALLATION

FIGURE 15—IHFL FACE MOUNT HANGER

TABLE 16—HDQIF INVERTED FLANGE FACE MOUNT HANGER [4]

STOCK NO.	STEEL GAGE	DIMENSIONS (in.)			FASTENER SCHEDULE[2]				ALLOWABLE LOADS (lbs) [1,3,4]			
					HEADER		JOIST		Download			Uplift
		W	H	D	Qty	Type	Qty	Type	C_D = 1.0	C_D = 1.15	C_D = 1.25	C_D = 1.6
HDQ179IF	14	$1^{13}/_{16}$	9	3	8	WS3	4	WS15	3340	3605	3605	1140
HDQ17112IF	14	$1^{13}/_{16}$	11	3	10	WS3	6	WS15	3605	3605	3605	1520
HDQ1714IF	14	$1^{13}/_{16}$	$13^{3}/_{8}$	3	12	WS3	6	WS15	4660	4840	4840	1995
HDQ310IF	14	$2^{9}/_{16}$	9	3	8	WS3	4	WS15	3340	3605	3605	1140
HDQ210-2IF	14	$3^{1}/_{4}$	9	3	12	WS3	6	WS3	5015	5145	5145	2975
HDQ410IF	14	$3^{9}/_{16}$	9	3	12	WS3	6	WS3	5015	5145	5145	2975
HDQ412IF	14	$3^{9}/_{16}$	11	3	14	WS3	6	WS3	5605	5605	5605	3280
HDQ210-3IF	14	$4^{5}/_{8}$	9	3	12	WS3	6	WS3	5015	5145	5145	2975
HDQ5210IF	14	$5^{1}/_{4}$	9	3	12	WS3	6	WS3	5015	5145	5145	2975
HDQ5212IF	14	$5^{1}/_{4}$	11	3	14	WS3	6	WS3	5605	5605	5605	3280
HDQ610IF	14	$5^{1}/_{2}$	9	3	12	WS3	6	WS3	5015	5145	5145	2975
HDQ612IF	14	$5^{1}/_{2}$	11	3	14	WS3	6	WS3	5605	5605	5605	3280

For **SI:** 1 inch = 25.4 mm, 1 lbf = 4.45 N, 1 psi = 6.895 kPa.

[1]Allowable loads have been adjusted for load duration factors, C_D, as shown, in accordance with the NDS. The allowable loads do not apply to loads of other durations and are not permitted to be adjusted for other load durations. See Sections 4.1 and 4.2 for additional design and installations requirements.

[2]Wood screws (WS) used for HDQIF hangers are described in ESR-2761 and are included with the hangers.

[3]Allowable loads shown are for installations in wood members complying with Section 3.19.2 and are based on the use of wood members with a reference compression perpendicular to grain design value, $F_{c\text{-}perp}$, of 625 psi or greater.

[4]HDQIF hangers provide torsional resistance, where torsional resistance is defined as a moment not less than 75 pounds (334 N) times the depth of the hanger, at which the lateral movement of the top or bottom of the joist with respect to the vertical position of the joist is 0.125 inch (3.2 mm).

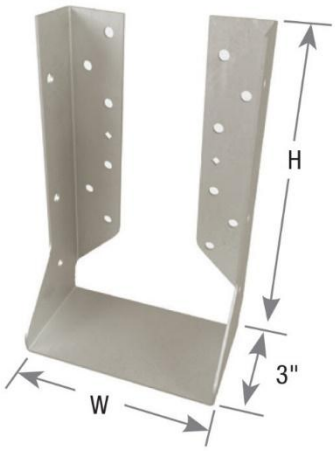

HDQIF Inverted Flange Face Mount Hanger

Typical HDQIF Installation

FIGURE 16—HDQIF INVERTED FLANGE FACE MOUNT HANGER

TABLE 17—JLIF-TZ INVERTED FLANGE JOIST HANGER

STOCK NO.	STEEL GAGE	DIMENSIONS (in.)			FASTENER SCHEDULE[3]				ALLOWABLE LOADS (lbs)[1,2,4]			
					HEADER		JOIST		Download			Uplift
		W	H	D	Qty	Type	Qty	Type	C_D = 1.0	C_D = 1.15	C_D = 1.25	C_D = 1.6
JL24-IF	18	$1^9/_{16}$	$3^1/_8$	$1^1/_2$	4	10d Common	2	10dx$1^1/_2$	480	545	590	265
						16d Common			570	600	600	265
JL26-IF	18	$1^9/_{16}$	$4^1/_2$	$1^1/_2$	6	10d Common	4	10dx$1^1/_2$	720	820	885	740
						16d Common			860	975	1060	740
JL28-IF	18	$1^9/_{16}$	$6^1/_8$	$1^1/_2$	8	10d Common	4	10dx$1^1/_2$	960	1095	1180	740
						16d Common			1145	1195	1195	740
JL210-IF	18	$1^9/_{16}$	$8^1/_4$	$1^1/_2$	11	10d Common	6	10dx$1^1/_2$	1320	1505	1625	1115
						16d Common			1575	1785	1940	1115

For **SI:** 1 inch = 25.4 mm, 1 lbf = 4.45 N, 1 psi = 6.895 kPa.

[1]Allowable loads have been adjusted for load duration factors, C_D, as shown, in accordance with the NDS. The allowable loads do not apply to loads of other durations and are not permitted to be adjusted for other load durations. See Sections 4.1 and 4.2 for additional design and installations requirements.

[2]Allowable loads shown are for installations in wood members complying with Section 3.19.2 and are based on the use of wood members with a reference compression perpendicular to grain design value, $F_{c\text{-}perp}$, of 625 psi or greater.

[3]See Section 3.19.3 for fastener dimensions and mechanical properties.

[4]JLIF-TZ hangers provide torsional resistance, where torsional resistance is defined as a moment not less than 75 pounds (334 N) times the depth of the hanger, at which the lateral movement of the top or bottom of the joist with respect to the vertical position of the joist is 0.125 inch (3.2 mm).

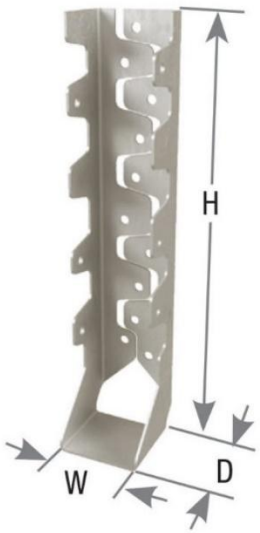

JLIF Inverted Flange Face Mount Joist Hanger

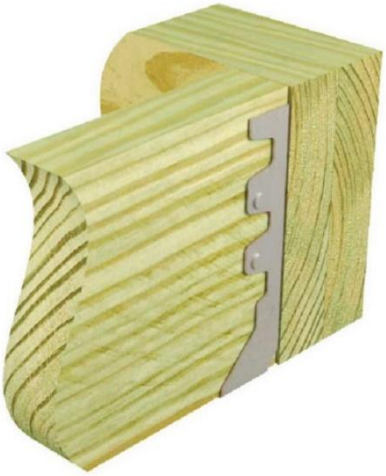

Typical JLIF Inverted flange installation

FIGURE 17—JLIF-TZ INVERTED FLANGE JOIST HANGER

TABLE 18—MUS SLANT NAIL JOIST HANGERS

STOCK NO.	STEEL GAGE	DIMENSIONS (in.)		FASTENER SCHEDULE[4]				ALLOWABLE LOADS (lbs)[2,3,5]			
				HEADER		JOIST[1]		Download			Uplift
		W	H	Qty	Type	Qty	Type	C_D = 1.0	C_D = 1.15	C_D = 1.25	C_D = 1.6
MUS26	18	$1^9/_{16}$	$5^1/_{16}$	6	10d Common	6	10d Common	1310	1495	1620	865
MUS28	18	$1^9/_{16}$	$7^1/_{16}$	8	10d Common	8	10d Common	1745	1995	2160	1230

For **SI:** 1 inch = 25.4 mm, 1 lbf = 4.45 N, 1 psi = 6.895 kPa.

[1]Joist nails must be driven horizontally into the joist at an angle of 30- to- 45-degrees from normal, such that they penetrate through the joist and into the header.

[2]Allowable loads have been adjusted for load duration factors, C_D, as shown, in accordance with the NDS. The allowable loads do not apply to loads of other durations and are not permitted to be adjusted for other load durations. See Sections 4.1 and 4.2 for additional design and installations requirements.

[3]Allowable loads shown are for installations in wood members complying with Section 3.19.2 and are based on the use of wood members with a reference compression perpendicular to grain design value, $F_{c\text{-}perp}$, of 625 psi or greater.

[4]See Section 3.19.3 for fastener dimensions and mechanical properties.

[5]MUS hangers provide torsional resistance, where torsional resistance is defined as a moment not less than 75 pounds (334 N) times the depth of the hanger, at which the lateral movement of the top or bottom of the joist with respect to the vertical position of the joist is 0.125 inch (3.2 mm).

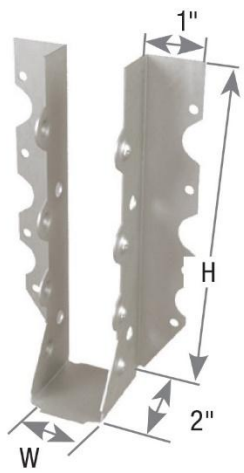

MUS Slant Nail Face Mount Joist Hanger

Typical MUS Installation

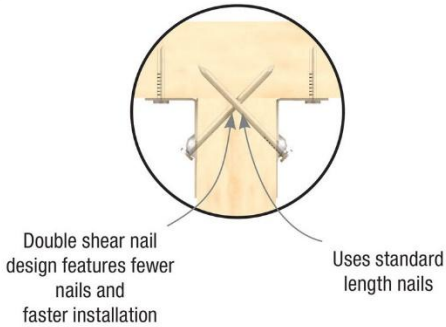

Double Shear Nailing Detail

FIGURE 18—MUS SLANT NAIL JOIST HANGERS

TABLE 19—STEEL TYPE, STRENGTH AND CORROSION RESISTANCE

Product	Steel	Coating[1]
CLPBF Butterfly Hanger	ASTM A653, SS designation, Grade 40	G90
HD Face Mount Hanger	ASTM A653, SS designation, Grade 40	G90
HUS Slant Nail Joist Hanger	ASTM A653, SS designation, Grade 40	G90, G185
JL Standard Joist Hanger	ASTM A653, SS designation, Grade 40	G90
JN Power Nail Hanger	ASTM A653, SS designation, Grade 40	G90
JNE Power Nail Hanger	ASTM A653, SS designation, Grade 40	G90
JUS Slant Nail Joist Hanger	ASTM A653, SS designation, Grade 40	G90, G185
SUH Joist Hanger	ASTM A653, SS designation, Grade 40	G90
THD Face Mount Hanger	ASTM A653, SS designation, Grade 40	G90, G185
THDH Face Mount Hanger	ASTM A653, SS designation, Grade 40	G90, G185
THF Face Mount Hanger	ASTM A653, SS designation, Grade 40	G90
THFI Face Mount Hanger	ASTM A653, SS designation, Grade 40	G90
LGU/MGU/HGU Girder Hanger	ASTM A653, SS designation, Grade 40	G90
THDHQ Girder Truss Hanger	ASTM A653, SS designation, Grade 40	G90
IHF Face Mount Hanger	ASTM A653, SS designation, Grade 40	G90
IHFL Face Mount Hanger	ASTM A653, SS designation, Grade 40	G90
HDQIF Inverted Flange Face Mount Hangers	ASTM A653, SS designation, Grade 40	G90
JLIF-TZ Inverted Flange Face Mount Hangers	ASTM A653, SS designation, Grade 40	G185
MUS Slant Nail Face Mount Joist Hangers	ASTM A653, SS designation, Grade 40	G90

[1]Corrosion protection is a zinc coating in accordance with ASTM A653.

DIVISION: 06 00 00—WOOD, PLASTICS AND COMPOSITES
Section: 06 05 23—Wood, Plastic, and Composite Fastenings

REPORT HOLDER:

MITEK® INC.

EVALUATION SUBJECT:

MITEK® FACE MOUNT HANGERS FOR WOOD FRAMED CONSTRUCTION

1.0 REPORT PURPOSE AND SCOPE

Purpose:

The purpose of this evaluation report supplement is to indicate that MiTek face mount hangers for wood framed construction, described in ICC-ES evaluation report ESR-3445, have also been evaluated for compliance with the codes noted below as adopted by the Los Angeles Department of Building and Safety (LADBS).

Applicable code editions:

- 2026 *City of Los Angeles Building Code* (LABC)
- 2026 *City of Los Angeles Residential Code* (LARC)

2.0 CONCLUSIONS

The MiTek face mount hangers for wood framed construction, described in Sections 2.0 through 7.0 of the evaluation report ESR-3445, comply with the LABC Chapter 23, and the LARC, and are subject to the conditions of use described in this supplement.

3.0 CONDITIONS OF USE

The MiTek face mount hangers for wood framed construction, described in this evaluation report supplement must comply with all of the following conditions:

- All applicable sections in the evaluation report ESR-3445.
- The design, installation, conditions of use and identification are in accordance with the 2024 *International Building Code®* (IBC) or 2024 *International Residential Code®* (IRC) provisions, as applicable, noted in the evaluation report ESR-3445.
- The design, installation and inspection are in accordance with additional requirements of LABC Chapters 16 and 17, as applicable.
- The supported end of joist or beam must be within $^{1}/_{4}$-inch from the supporting member.
- Solid blocking must be required for all joist hangers supporting roof joists having one end twisted more than one-half degree per foot of length relative to the other end, except as specifically noted in the evaluation report.
- Under the LARC, an engineered design in accordance with LARC Section R301.1.3 must be submitted.

This evaluation report supplement expires concurrently with the evaluation report, reissued October 2024 and revised July 2026.

ICC-ES Evaluation Reports are not to be construed as representing aesthetics or any other attributes not specifically addressed, nor are they to be construed as an endorsement of the subject of the report or a recommendation for its use. There is no warranty by ICC Evaluation Service, LLC, express or implied, as to any finding or other matter in this report, or as to any product covered by the report.

Copyright © 2026 ICC Evaluation Service, LLC. All rights reserved.

DIVISION: 06 00 00—WOOD, PLASTICS AND COMPOSITES
Section: 06 05 23—Wood, Plastic, and Composite Fastenings

REPORT HOLDER:

MITEK® INC.

EVALUATION SUBJECT:

MITEK® FACE MOUNT HANGERS FOR WOOD FRAMED CONSTRUCTION

1.0 REPORT PURPOSE AND SCOPE

Purpose:

The purpose of this evaluation report supplement is to indicate that MiTek face mount hangers for wood framed construction, described in ICC-ES evaluation report ESR-3445, have also been evaluated for compliance with the code(s) noted below.

Applicable code edition*(s)*:

- *2025 and 2022 California Building Code* (CBC)

For evaluation of applicable Chapters adopted by the California Office of Statewide Health Planning and Development (OSHPD) AKA: California Department of Health Care Access and Information (HCAI) and the Division of State Architect (DSA), see Sections 2.1.1 and 2.1.2 below.

- *2025 and 2022 California Residential Code* (CRC)

2.0 CONCLUSIONS

2.1 CBC:

The MiTek face mount hangers for wood framed construction, described in Sections 2.0 through 7.0 of the evaluation report ESR-3445, comply with CBC Chapter 23, provided the design and installation are in accordance with the 2024 and 2021 *International Building Code®* (IBC) provisions, as applicable, noted in the evaluation report and the additional requirements of CBC Chapter 16, 17 and 23, as applicable.

2.1.1 OSHPD:

The applicable OSHPD Sections and Chapters of the CBC are beyond the scope of this supplement.

2.1.2 DSA:

The applicable DSA Sections and Chapters of the CBC are beyond the scope of this supplement.

2.2 CRC:

The MiTek face mount hangers for wood framed construction, described in Sections 2.0 through 7.0 of the evaluation report ESR-3445, comply with CRC Chapter 3, provided the design and installation are in accordance with the 2024 and 2021 *International Residential Code®* (IRC) provisions, as applicable, noted in the evaluation report and the additional requirements of CRC Chapter 3, as applicable.

This supplement expires concurrently with the evaluation report, reissued October 2024 and revised July 2026.

ICC-ES Evaluation Reports are not to be construed as representing aesthetics or any other attributes not specifically addressed, nor are they to be construed as an endorsement of the subject of the report or a recommendation for its use. There is no warranty by ICC Evaluation Service, LLC, express or implied, as to any finding or other matter in this report, or as to any product covered by the report.

Copyright © 2026 ICC Evaluation Service, LLC. All rights reserved.

DIVISION: 06 00 00—WOOD, PLASTICS AND COMPOSITES
Section: 06 05 23—Wood, Plastic, and Composite Fastenings

REPORT HOLDER:

MITEK®, INC.

EVALUATION SUBJECT:

MITEK® FACE MOUNT HANGERS FOR WOOD FRAMED CONSTRUCTION

1.0 REPORT PURPOSE AND SCOPE

Purpose:

The purpose of this evaluation report supplement is to indicate that MiTek face mount hangers for wood framed construction, described in ICC-ES evaluation report ESR-3445, have also been evaluated for compliance with the codes noted below.

Applicable code editions:

- 2026 and 2023 *Florida Building Code—Building*
- 2026 and 2023 *Florida Building Code—Residential*

2.0 CONCLUSIONS

The MiTek face mount hangers for wood framed construction, described in Sections 2.0 through 7.0 of the evaluation report ESR-3445, comply with the *Florida Building Code—Building* and the *Florida Building Code—Residential*. The design requirements must be determined in accordance with the *Florida Building Code—Building* or the *Florida Building Code—Residential*, as applicable. The installation requirements noted in the evaluation report ESR-3445 for the 2024 and 2021 *International Building Code®* meet the requirements of the *Florida Building Code—Building* or the *Florida Building Code—Residential*, as applicable, with the following conditions:

- For use within 3,000 feet of a saltwater coastline, fasteners and connectors must comply with Section 1711 and Table 1711.1 of the 2026 *Florida Building Code—Building* or Section R332 and Table R332.1 of the 2026 *Florida Building Code—Residential*, as applicable.
- The MiTek face mount hangers for wood wood framed construction described in the evaluation report are structural connectors used for connecting wood framing members in accordance with Section 2304.10.3 of the *Florida Building Code—Building*. The connectors may also be used in structures regulated under the *Florida Building Code—Residential* when an engineered design is submitted to, and approved by, the code official, in accordance with Section R301.1.3 of the *Florida Building Code—Residential*.
- Connectors and fasteners used in contact with preservative-treated or fire-retardant-treated wood must comply with Section 2304.10.5 of the *Florida Building Code—Building* or Section R317.3 of the *Florida Building Code—Residential*, as applicable.

Use of the MiTek face mount hangers for wood framed construction has also been found to be in compliance with the High-Velocity Hurricane Zone (HVHZ) provisions of the *Florida Building Code—Building* and the *Florida Building Code—Residential* with the following condition:

a) For connections subject to uplift, the connection must be designed for no less than 700 pounds (3114 N).

For products falling under Florida Rule 61G20-3, verification that the report holder's quality assurance program is audited by a quality assurance entity approved by the Florida Building Commission for the type of inspections being conducted is the responsibility of an approved validation entity (or the code official, when the report holder does not possess an approval by the Commission). Florida Rule 61G20-3 is applicable to products and/or systems which comprise the building envelope and structural frame for compliance with the structural requirements of the Florida Building Code.

This evaluation report supplement expires concurrently with the evaluation report, reissued October 2024 and revised July 2026.

ICC-ES Evaluation Reports are not to be construed as representing aesthetics or any other attributes not specifically addressed, nor are they to be construed as an endorsement of the subject of the report or a recommendation for its use. There is no warranty by ICC Evaluation Service, LLC, express or implied, as to any finding or other matter in this report, or as to any product covered by the report.

Copyright © 2026 ICC Evaluation Service, LLC. All rights reserved.